一、Characteristic Description :

1. Industry common cavity.
2. Continuous-duty rated coil.
3. Hardened seat for long life and low leakage.
4. Standard voltage settings.
5. Various specification optional.
6. Electrical outlet optional.

二、Function Choice :

1. Two Position Two Way

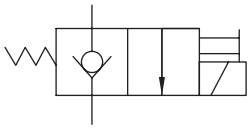

Poppet-type

220/220H/202 Nomally Closed

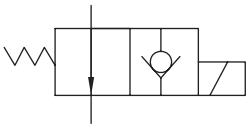

Poppet-type

221 Nomally Open

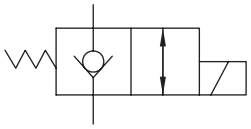

Poppet-type

222 Nomally Closed

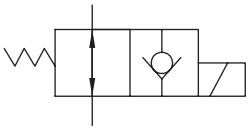

Poppet-type

223 Nomally Open

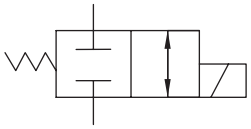

Spool-type

224 Nomally Closed

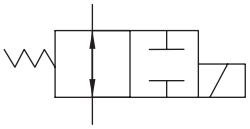

Spool-type

225 Nomally Open

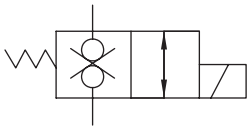

Poppet-type

226 Nomally Closed, Small Flux

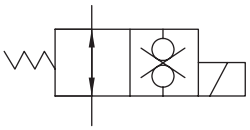

Poppet-type

227 Nomally Open

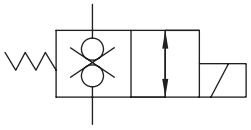

Poppet-type

228 Nomally Closed, Large Flux

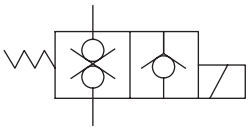

Poppet-type

229 Nomally Closed

2、Two Position Three Way

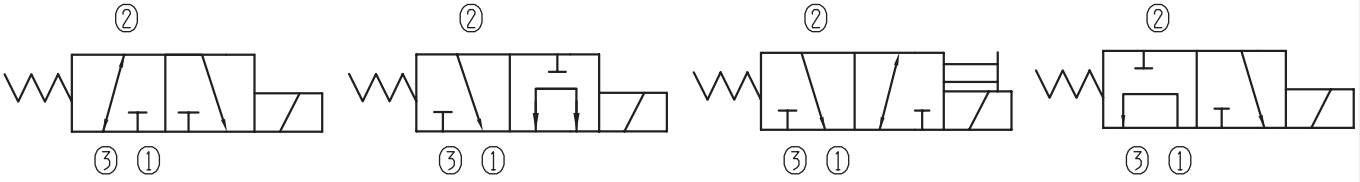

230　231　232/232H　234

3、Two Position Four Way

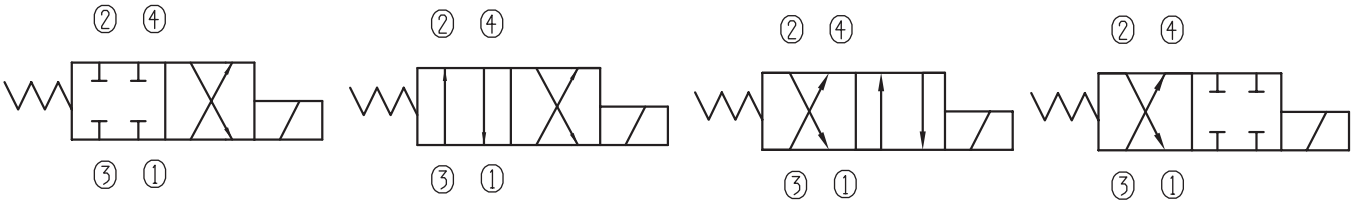

240　241　242　243

4、Three Position Four Way

34M　340

34Y　34H

三、Application Attention :

1, About all the spool type valve, if the spool held shifted under pressure for a long time, may be the spool will be stuck due to fluid residue, so that the spring can not overcome the clamping force, causing the spool valve can not be reset, It should be used periodically to prevent this from happening.

2, The valve cavity must be made in strict accordance with cavity dimensions, the processing must meet the requirements of thread tolerance class, we can install cartridge valves by hand easily, then press the specified torque with a wrench to tighten.

Two Way Two Position (Poppet-type)

BST08-202 Normally Closed, Reverse Flow Energized

Description of the process

When de-energized,the valve acts as a check valve,allowing flow from ② to ①,while blocking flow from ① to ②;When energized,allowing flow from ① to ② and ② to ① .

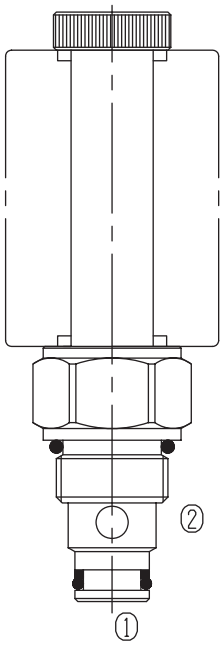

Specifications:

Max. Working Pressure	250bar
Flow Max.	See Performance
Internal Leakage	0.3ml/min at 210bar 5drops/min
Operating Volt	12VDC、24VDC、110VAC、220VAC
Min Voltage Requires	85% of normal voltage
Filtration Of Oil	20μm or better
Type of Standard Cavity	T4-1
Temperature	-30~+100℃
Standard Block Model	Standard Buna Seals T4-11*/13*/14*/16*

Symbol:

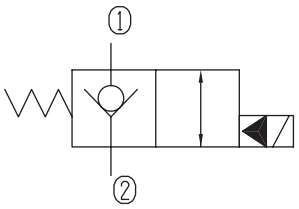

Performance:

32 cST Oil/45°C

① — ② ———

② — ① — —

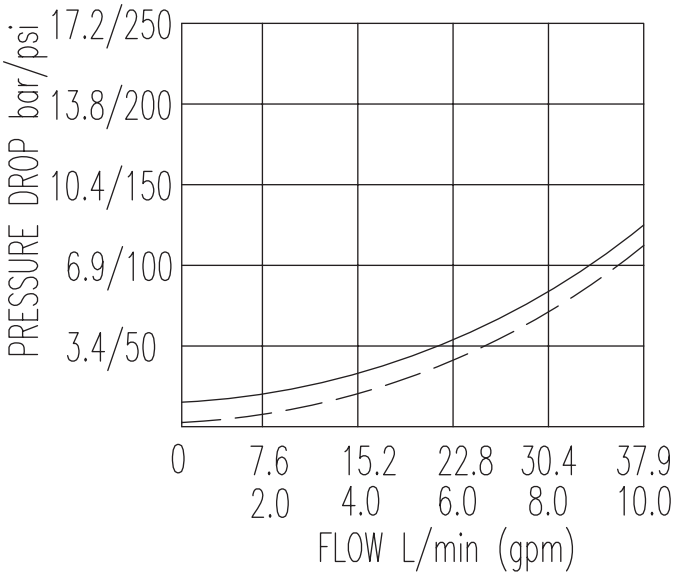

Two Way Two Position (Poppet-type)

BST08-202 Normally Closed, Reverse Flow Energized

Profile dimensions

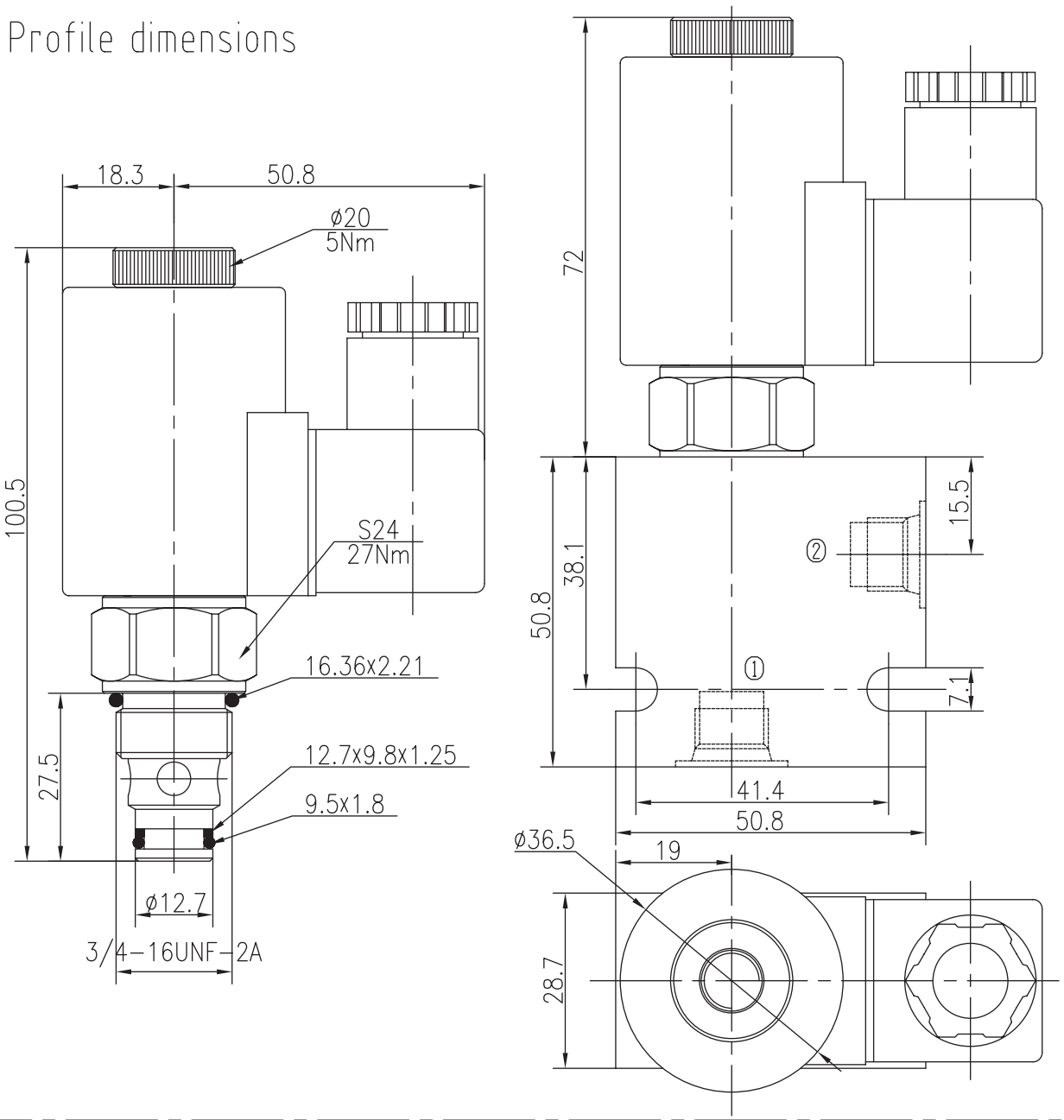

TO ORDER

BST08 - 202 - - - -

Solenoid Valve
Function

Body Porting
Omit for Cartridge only

G1/4 4G
G3/8 8G
SAE4 4T
SAE6 6T

Seals
Buna(Std.) N
Fluorocarbon V

Voltage
12 12VDC
24 24VDC
110 110VAC
220 220VAC

Connection
DL Double Leads
DH Electrial Outlet

Two Way Two Position (Poppet-type)

BST08-220 Normally Closed

Description of the process

When de-energized,the valve acts as a check valve, allowing flow from ② to ①,while blocking flow from ① to ②;When energized,allowing flow from ① to ②, While ② to ① is severely restricted.To override,push button in,twist counter-clockwise 90° and release, the valve will remain open; push button in,twist clockwise 90° and release,the valve will remain close.

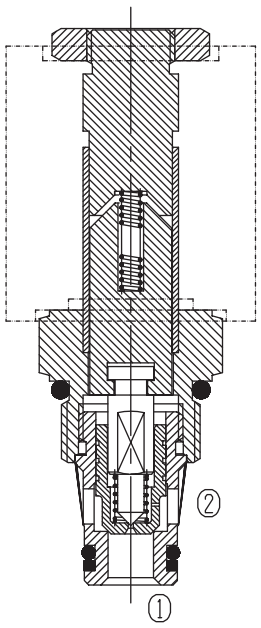

Specifications:

Max. Working Pressure	250bar
Flow Max.	See Performance 0.3ml/min at 210bar
Internal Leakage	5drops/min
Operating Volt	12VDC、24VDC、110VAC、220VAC
Min Voltage Requires	85% of normal voltage
Filtration Of Oil	20μm or better
Type of Standard Cavity	T4-1
Temperature	-30~+100℃ Standard Buna Seals
Standard Block Model	T4-11*/13*/14*/16*

Symbol:

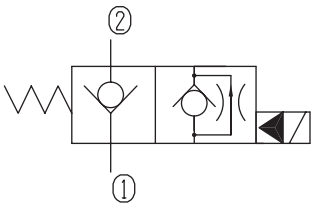

Performance:

32 cST Oil/45°C

② — ①

① — ② - - -

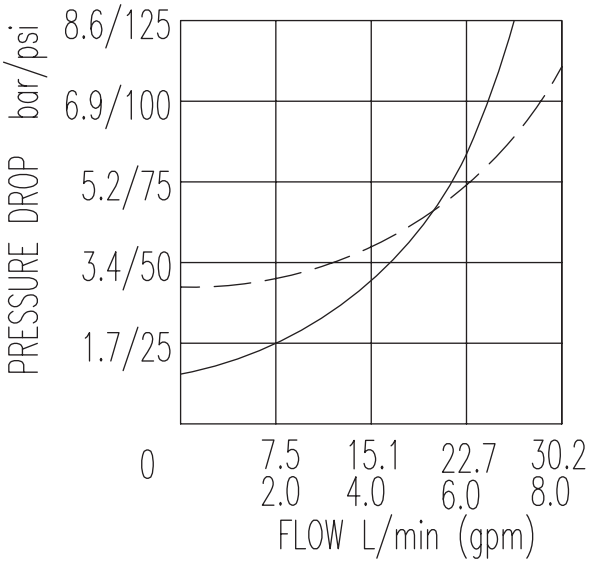

BST08-220 Normally Closed

Profile dimensions

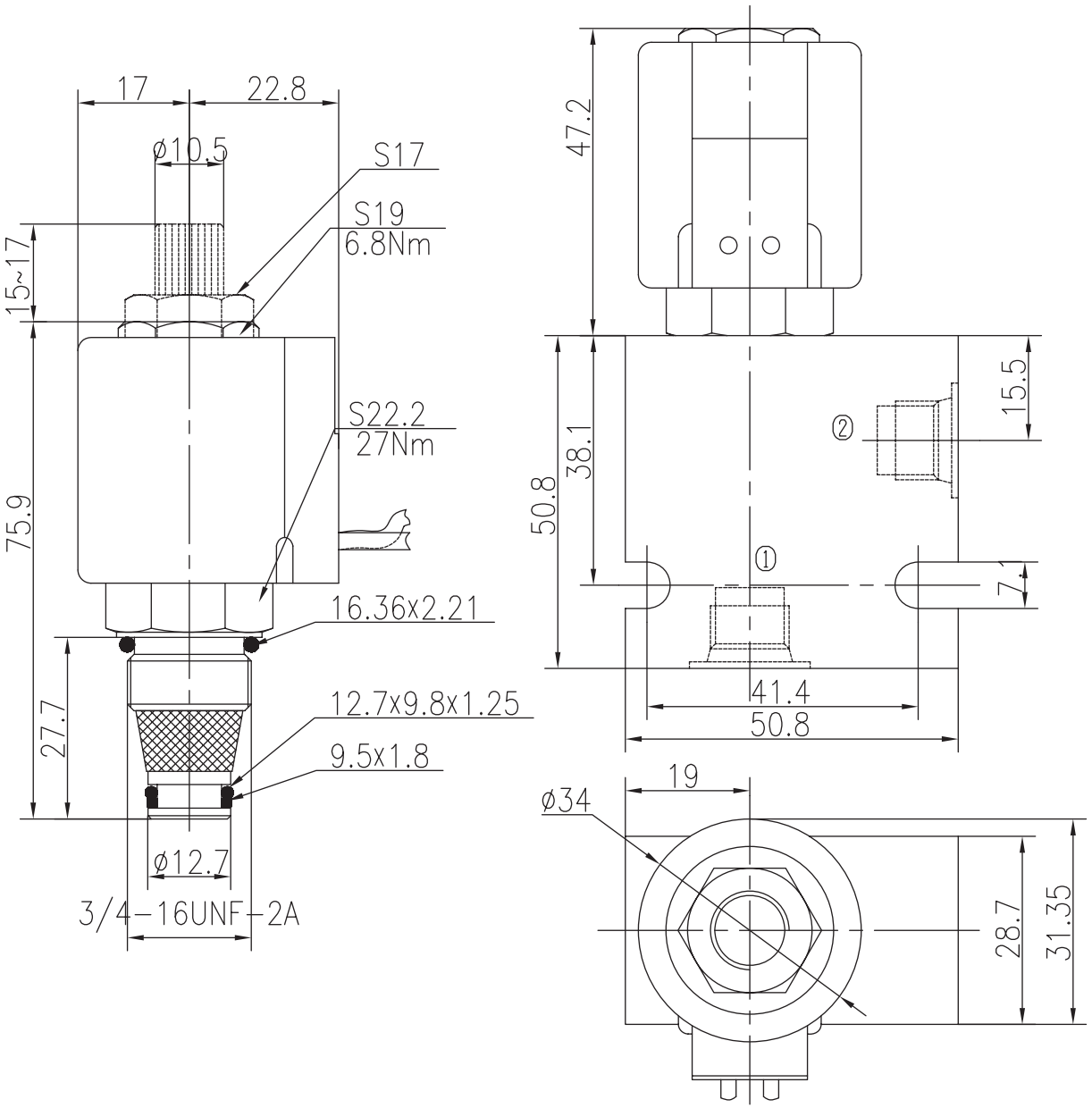

TO ORDER

BST08-220 - - - - -

- Solenoid Valve
  - Function
    - None(Blank)
    - Manual Override H
  - Body Porting
    - Omit for Cartridge only
    - G1/4 4G
    - G3/8 8G
    - SAE4 4T
    - SAE6 6T
- Seals
  - Buna(Std.) N
  - Fluorocarbon V
- Voltage
  - 12 12VDC
  - 24 24VDC
  - 110 110VAC
  - 220 220VAC
- Connection
  - DL Double Leads
  - DH Electrial Outlet

BST08S-220 Normally Closed

Description of the process

When de-energized,the valve acts as a check valve, allowing flow from ① to ②,while blocking flow from ② to ①;When energized,allowing flow from ② to ①, While ① to ② is severely restricted.To override,push button in,twist counter-clockwise 90° and release, the valve will remain open; push button in,twist clockwise 90° and release,the valve will remain close.

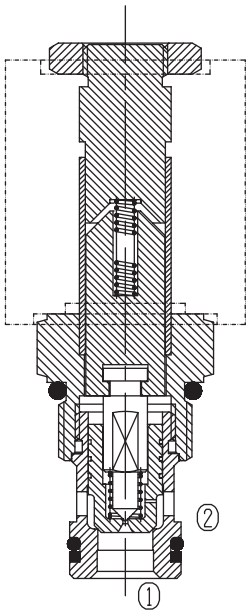

Specifications:

Max. Working Pressure	250bar
Flow Max.	See Performance 0.3ml/min at 210bar
Internal Leakage	5drops/min
Operating Volt	12VDC、24VDC、110VAC、220VAC
Min Voltage Requires	85% of normal voltage
Filtration Of Oil	20μm or better
Type of Standard Cavity	T4-1
Temperature	-30~+100℃ Standard Buna Seals
Standard Block Model	T4-11*/13*/14*/16*

Symbol:

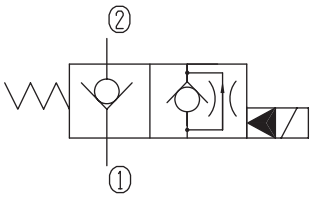

Performance: 32 cST Oil/45°C

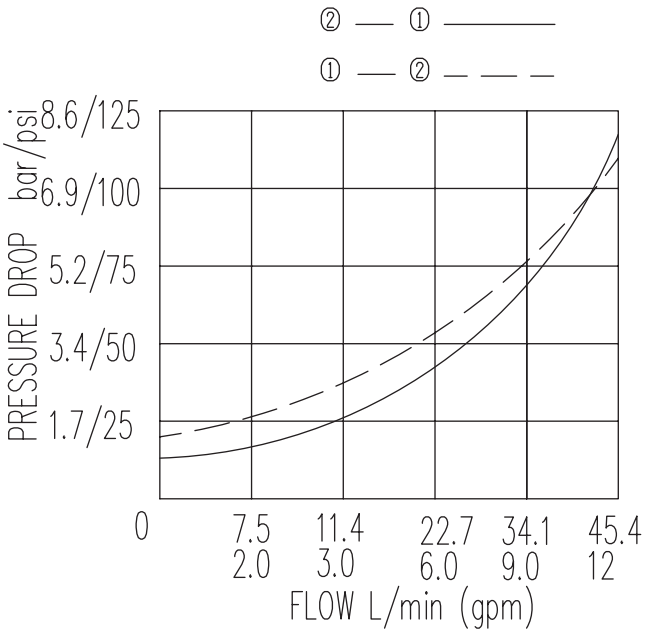

Two Way Two Position (Poppet-type)

BST08S-220 Normally Closed DHF06-220-02

Profile dimensions

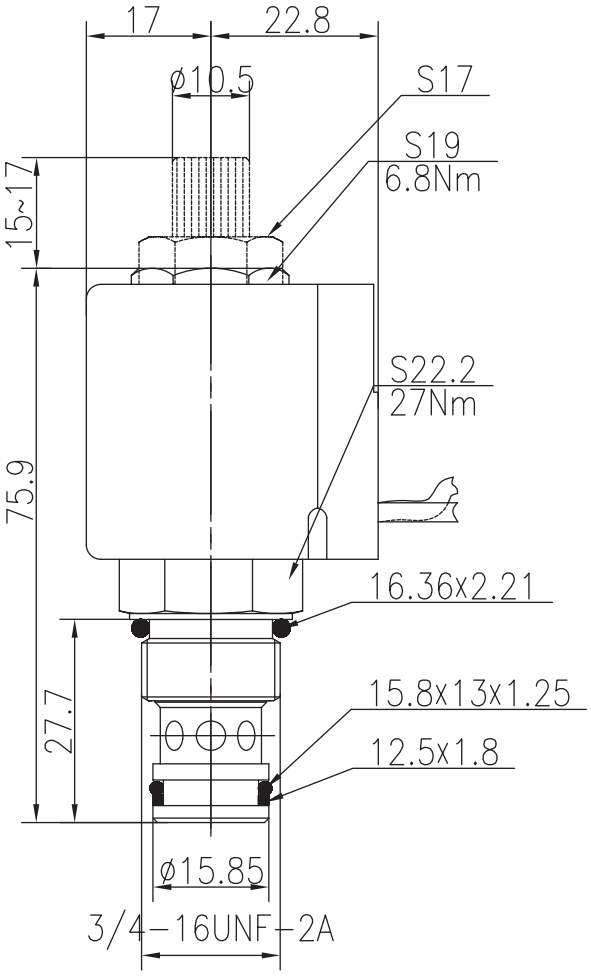

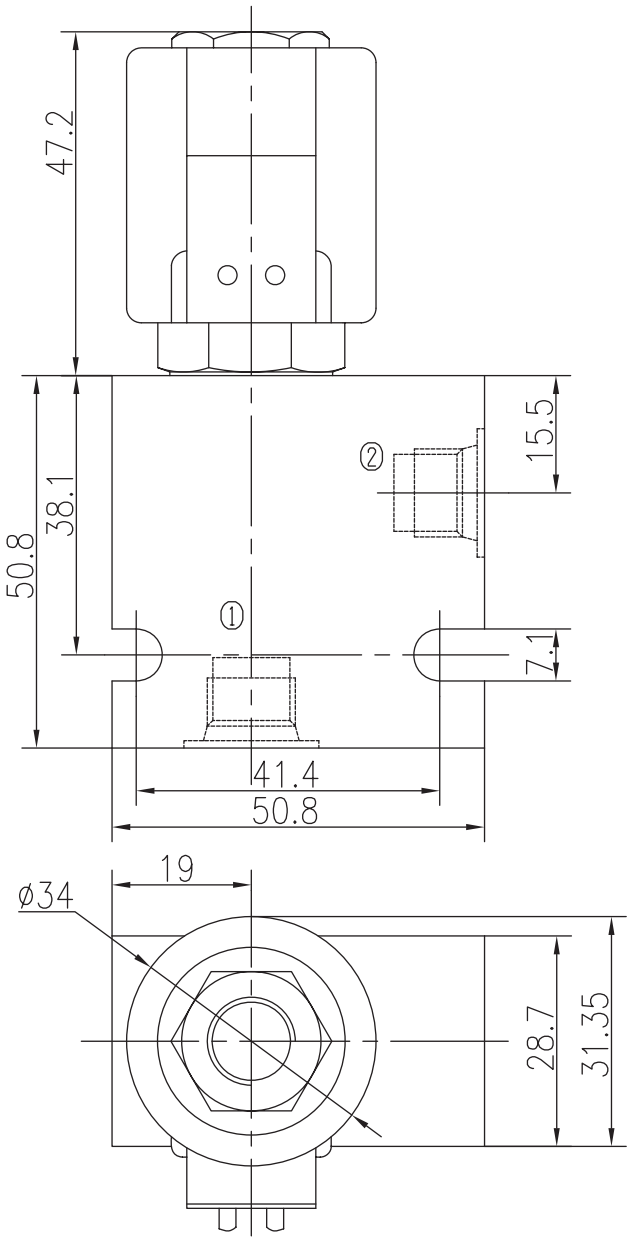

TO ORDER BST08S-220 - - - -

- Solenoid Valve
  - Function
    - None(Blank)
    - Manual Override H
  - Body Porting
    - Omit for Cartridge only
    - G1/4 4G
    - G3/8 8G
    - SAE4 4T
    - SAE6 6T
- Seals
  - Buna(Std.) N
  - Fluorocarbon V
- Voltage
  - 12 12VDC
  - 24 24VDC
  - 110 110VAC
  - 220 220VAC
- Connection
  - DL Double Leads
  - DH Electrial Outlet

Two Way Two Position (Poppet-type)

BST08-221 Normally Open

Description of the process

When energized,the valve acts as a check valve,allowing flow from ① to ②,while blocking flow from ② to ①;
When de-energized,allowing flow from ② to ①,While ① to ② is severely restricted.

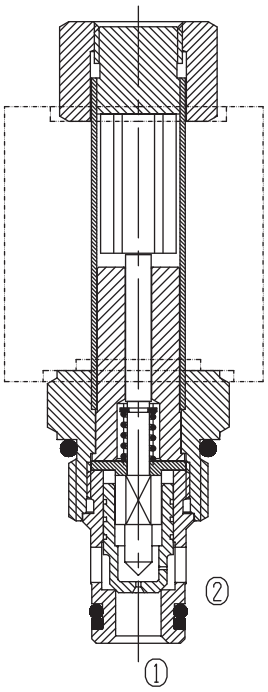

Specifications:

Max. Working Pressure	250bar
Flow Max.	See Performance
Internal Leakage	0.3ml/min at 210bar 5drops/min
Operating Volt	12VDC、24VDC、110VAC、220VAC
Min Voltage Requires	85% of normal voltage
Filtration Of Oil	20μm or better
Type of Standard Cavity	T4-1
Temperature	-30~+100℃ Standard Buna Seals
Standard Block Model	T4-11*/13*/14*/16*

Symbol:

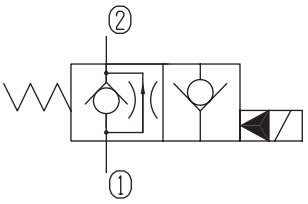

Characteristic: 32 cST Oil/40°C

② — ① ——— (d)
① — ② — — — (e)

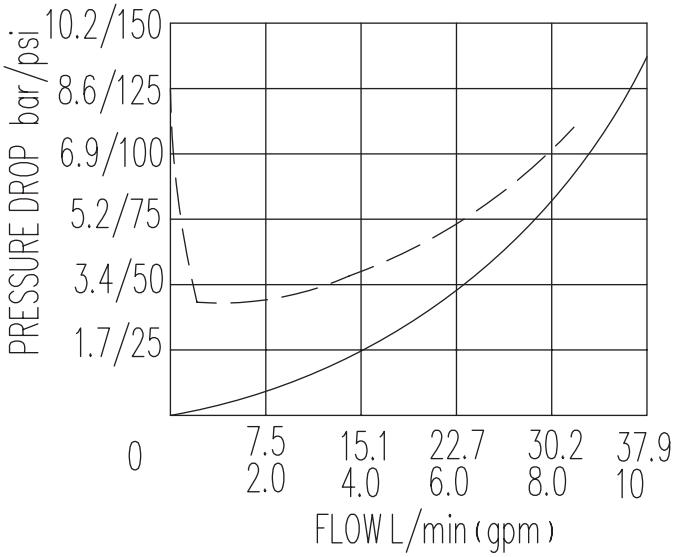

BST08-221 Normally Open

Profile dimensions

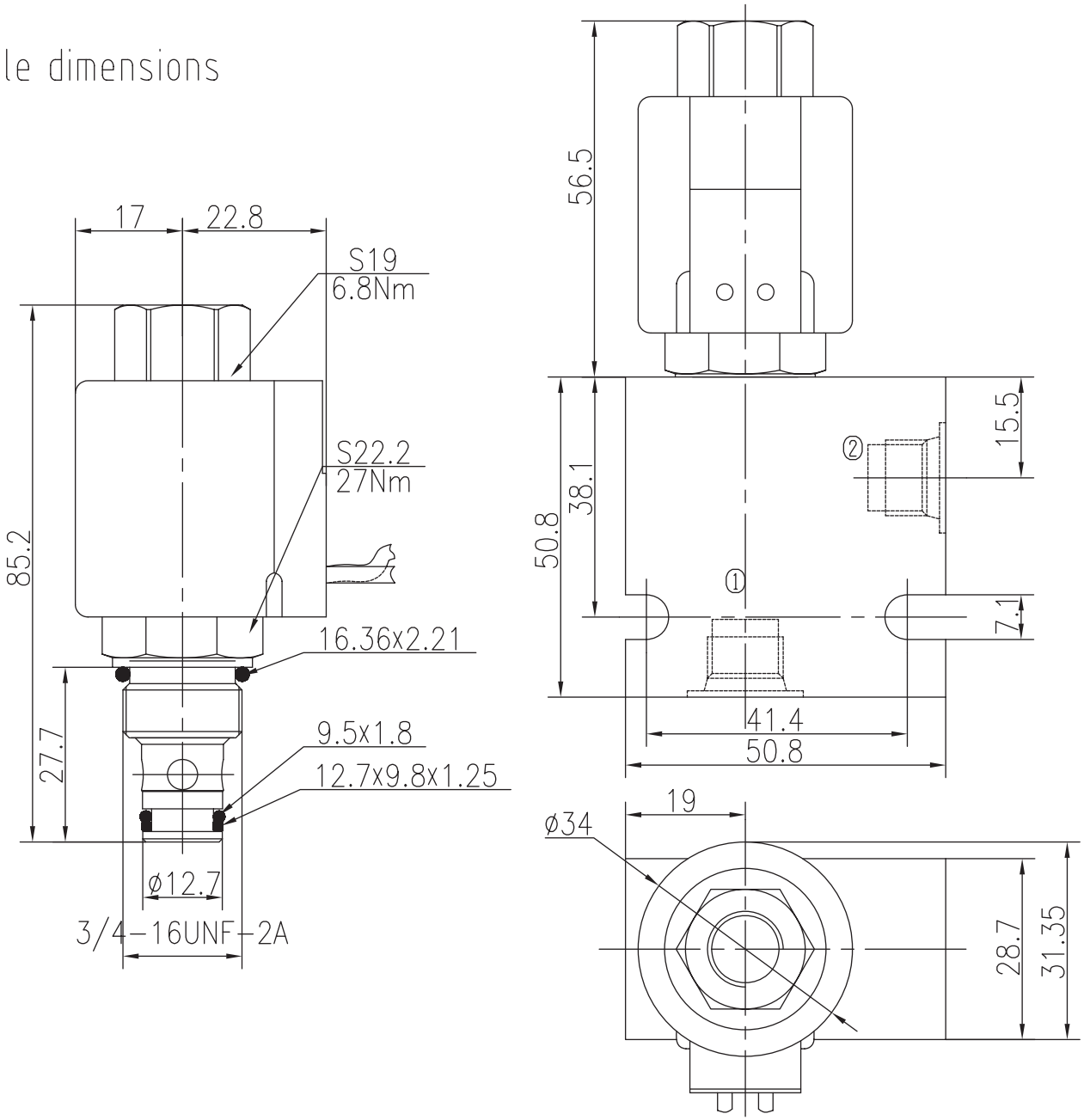

TO ORDER BST08-221 - _ _ _ _

- Solenoid Valve Function
- Body Porting (Omit for Cartridge only)
  - G1/4 4G
  - G3/8 8G
  - SAE4 4T
  - SAE6 6T
- Seals
  - Buna(Std.) N
  - Fluorocarbon V
- Voltage
  - 12 12VDC
  - 24 24VDC
  - 110 110VAC
  - 220 220VAC
- Connection
  - DL Double Leads
  - DH Electrial Outlet

Two Way Two Position (Poppet-type)

BST08-222 Normally Closed

Description of the process

When de-energized,the valve acts as a check valve,allowing flow from ① to ②, while blocking flow from ② to ①;
When energized,allowing flow from ① to ① and ① to ②.

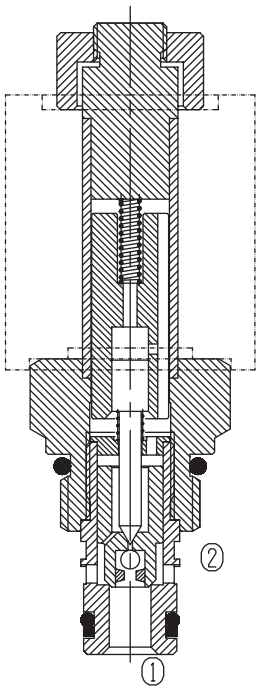

Specifications:

Max. Working Pressure	250bar
Flow Max.	See Performance 0.3ml/min at 210bar
Internal Leakage	5drops/min
Operating Volt	12VDC、24VDC、110VAC、220VAC
Min Voltage Requires	85% of normal voltage
Filtration Of Oil	20μm or better
Type of Standard Cavity	T4-1
Temperature	-30~+100℃ Standard Buna Seals
Standard Block Model	T4-11*/13*/14*/16*

Symbol:

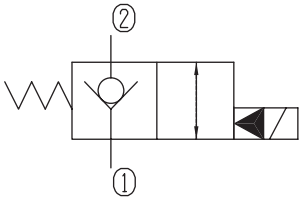

Characteristic: 32 cST Oil/40°C

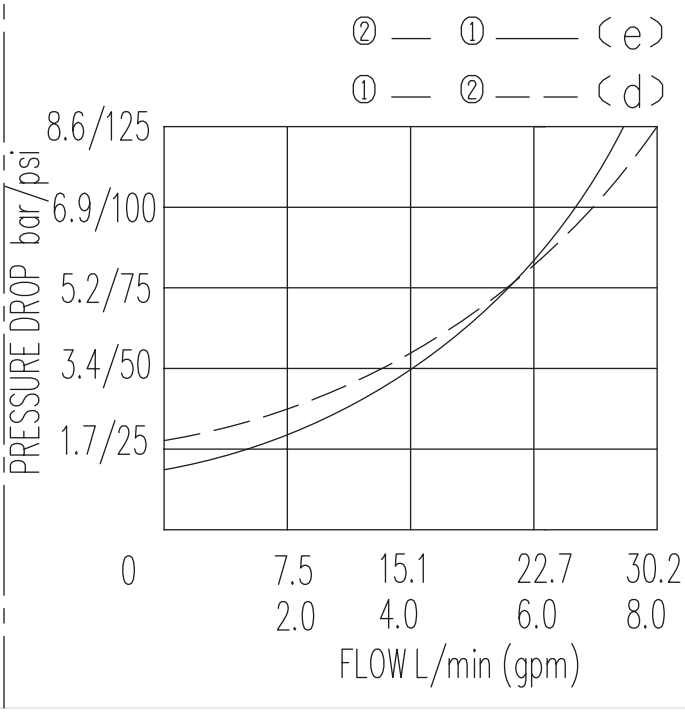

BST08-222 Normally Closed

Profile dimensions

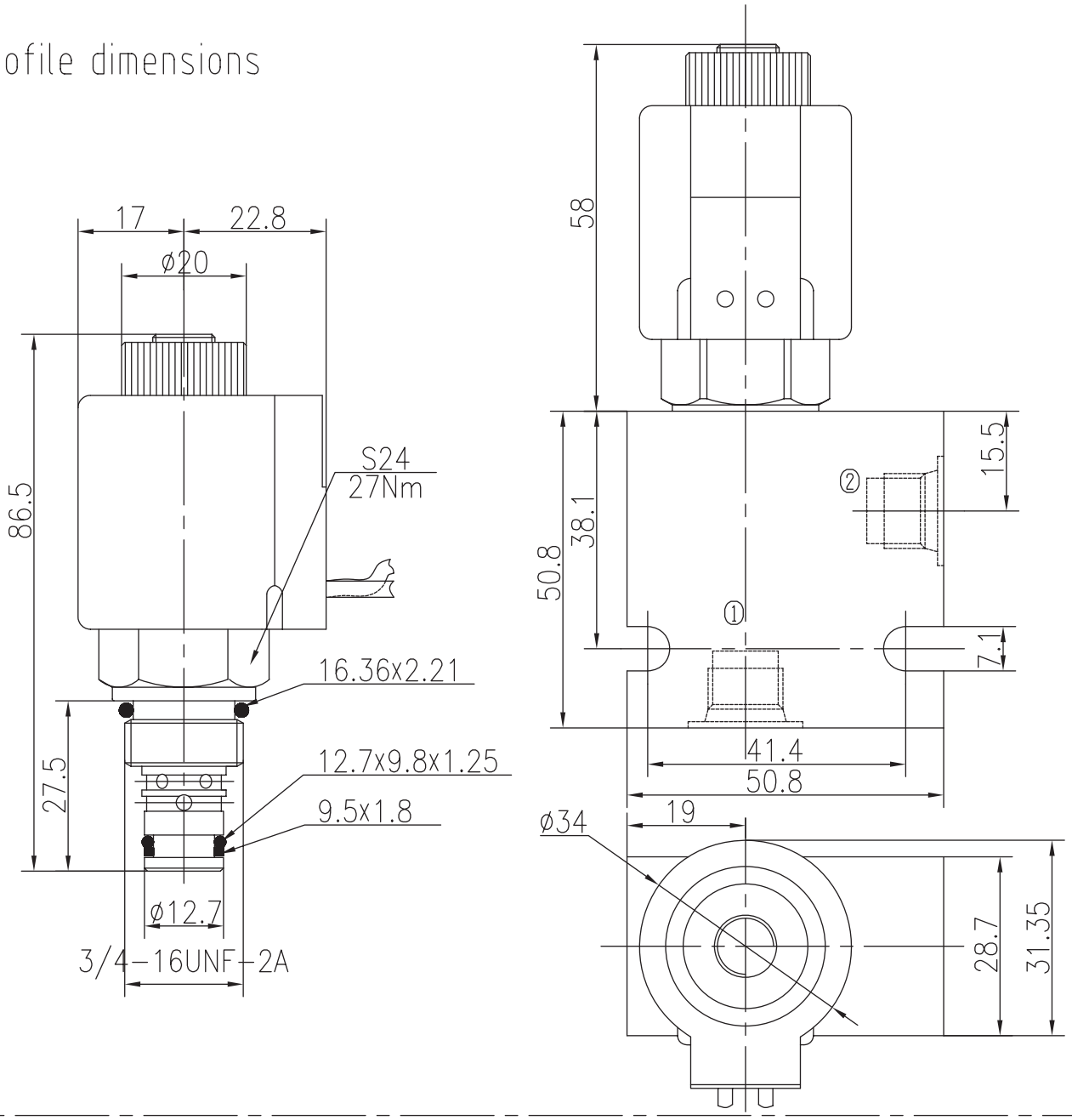

TO ORDER

BST08 -222 - - - - -

- Solenoid Valve Function
- Body Porting (Omit for Cartridge only)
  - G1/4 4G
  - G3/8 8G
  - SAE4 4T
  - SAE6 6T
- Seals
  - Buna(Std.) N
  - Fluorocarbon V
- Voltage
  - 12 12VDC
  - 24 24VDC
  - 110 110VAC
  - 220 220VAC
- Connection
  - DL Double Leads
  - DH Electrial Outlet

Two Way Two Position (Poppet-type)

BST08-223 Normally Open

Description of the process

When energized,the valve acts as a check valve,allowing flow from ① to ②,while blocking flow from ② to ①;When de-energized,allowing flow from ② to ① and ① to ②.To override, push button and remain,the valve blocking flow from ② to ①;Release the button,then the valve allowing flow from ② to ①.

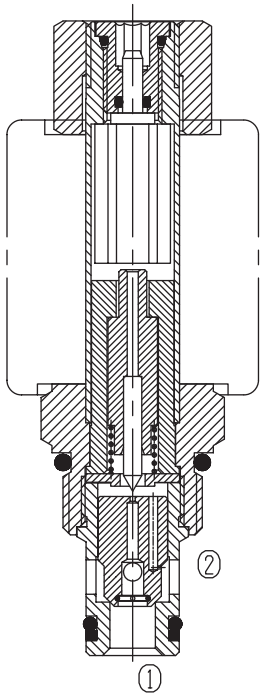

Specifications:

Max. Working Pressure	250bar
Flow Max.	See Performance 0.3ml/min at 210bar
Internal Leakage	5drops/min
Operating Volt	12VDC、24VDC、110VAC、220VAC
Min Voltage Requires	85% of normal voltage
Filtration Of Oil	20μm or better
Type of Standard Cavity	T4-1
Temperature	-30~+100℃ Standard Buna Seals
Standard Block Model	T4-11*/13*/14*/16*

Symbol:

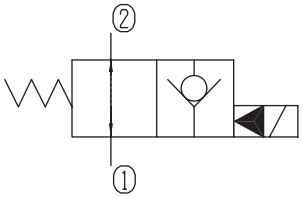

Characteristic: 32 cST Oil/40°C

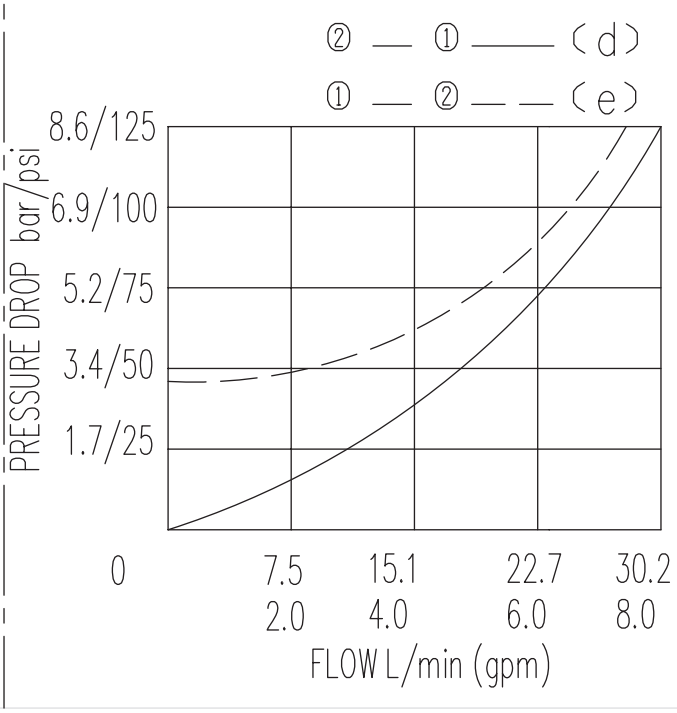

BST08-223 Normally Open

Profile dimensions

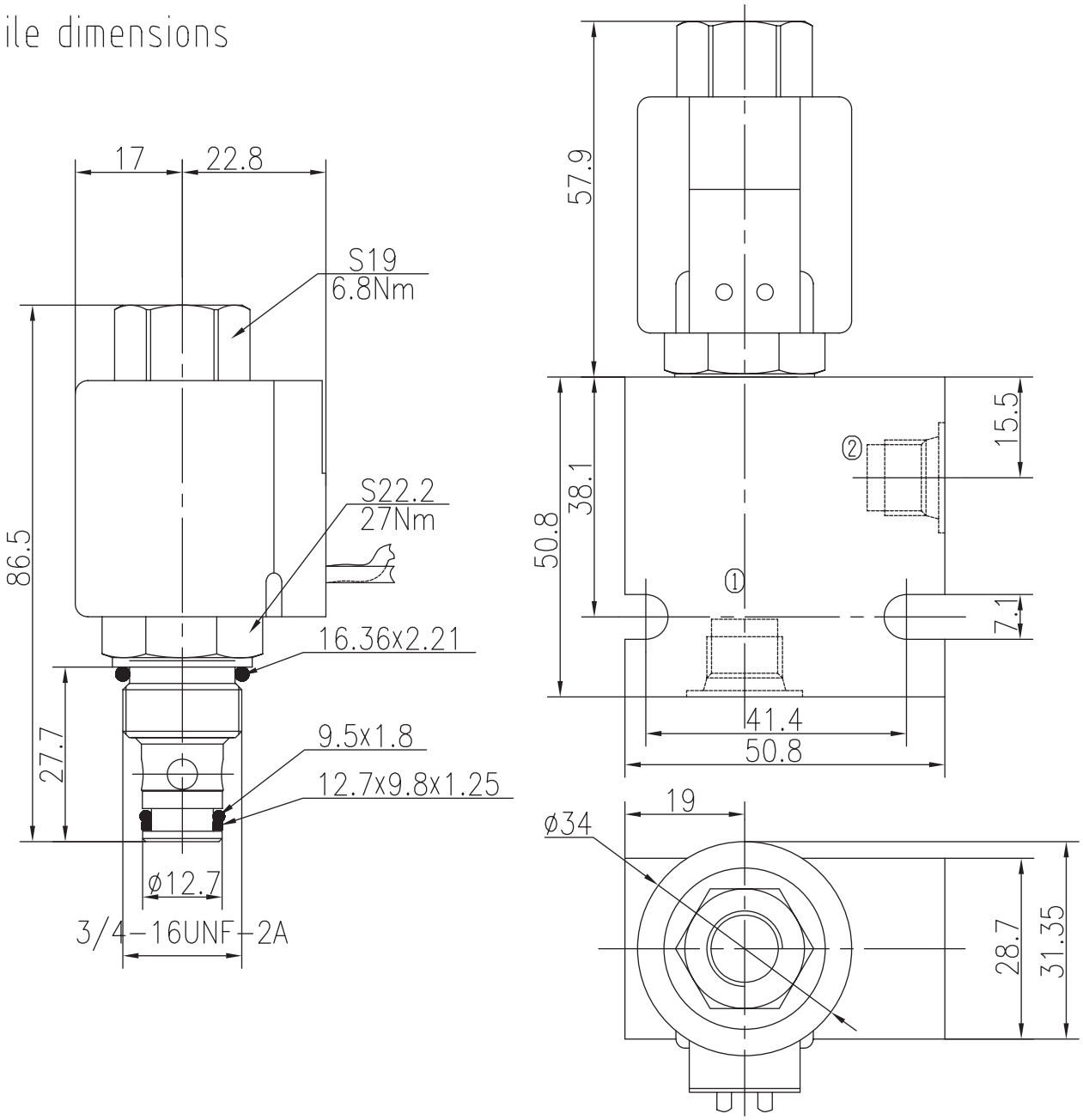

TO ORDER

BST08 -223 - - - - -

- Solenoid Valve Function
  - None(Blank)
  - Manual Override H
- Body Porting
  - Omit for Cartridge only
  - G1/4 4G
  - G3/8 8G
  - SAE4 4T
  - SAE6 6T
- Seals
  - Buna(Std.) N
  - Fluorocarbon V
- Voltage
  - 12 12VDC
  - 24 24VDC
  - 110 110VAC
  - 220 220VAC
- Connection
  - DL Double Leads
  - DH Electrial Outlet

Two Way Two Position (Spool-type)

BST08-224 Bidirectional Normally Closed

Description of the process

When de-energized,the valve blocks flow in both directionals,When energized,allowing flow from ② to ① and ① to ②.

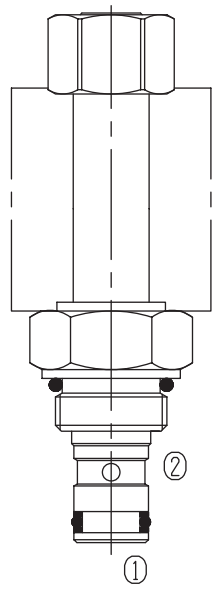

Specifications:

Max. Working Pressure	210bar
Flow Max.	See Performance
Internal Leakage	<80ml/min at 210bar
Operating Volt	12VDC、24VDC、110VAC、220VAC
Min Voltage Requires	85% of normal voltage
Filtration Of Oil	20μm or better
Type of Standard Cavity	T4-1
Temperature	-30~+100℃ Standard Buna Seals
Standard Block Model	T4-11*/13*/14*/16*

Symbol:

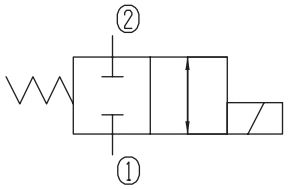

Characteristic:

32 cST Oil/40°C

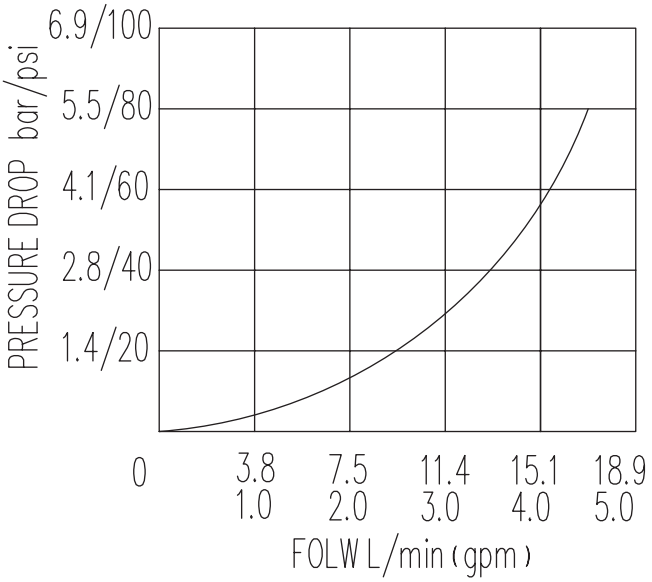

BST08-224 Bidirectional Normally Closed

Profile dimensions

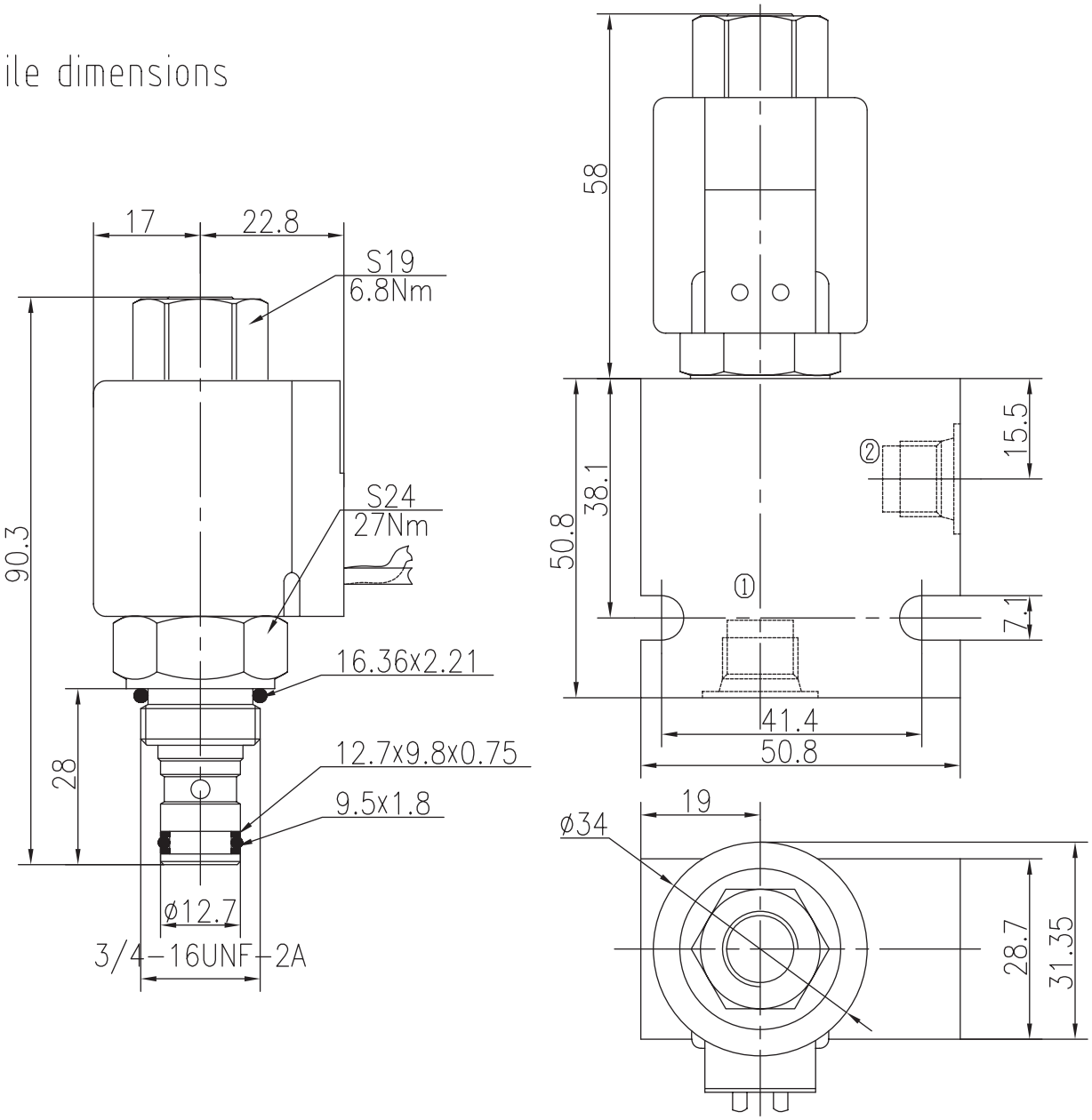

TO ORDER

BST08 -224 - - - - -

- Solenoid Valve
- Function
  - None(Blank)
  - Manual Override H
- Body Porting
  - G1/4 4G
  - G3/8 8G
  - SAE4 4T
  - SAE6 6T
  - Omit for Cartridge only
- Seals
  - Buna(Std.) N
  - Fluorocarbon V
- Voltage
  - 12 12VDC
  - 24 24VDC
  - 110 110VAC
  - 220 220VAC
- Connection
  - DL Double Leads
  - DH Electrial Outlet

Two Way Two Position (Spool-type)

BST08-225 Bidirectional Normally Open

Description of the process

When energized,the valve blocks flow in both directionals,When de-energized,allowing flow from ② to ① and ① to ②.

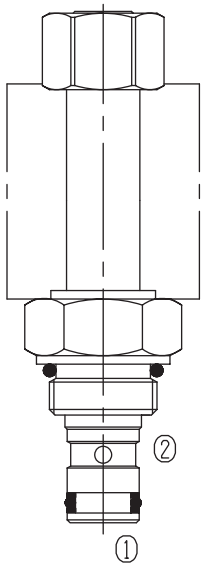

Specifications:

Max. Working Pressure	210bar
Flow Max.	See Performance
Internal Leakage	<80ml/min at 210bar
Operating Volt	12VDC、24VDC、110VAC、220VAC
Min Voltage Requires	85% of normal voltage
Filtration Of Oil	20μm or better
Type of Standard Cavity	T4-1
Temperature	-30~+100℃ Standard Buna Seals
Standard Block Model	T4-11*/13*/14*/16*

Symbol:

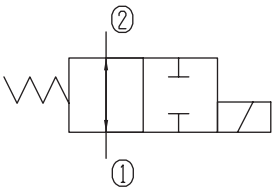

Characteristic:

32 cST Oil/40°C

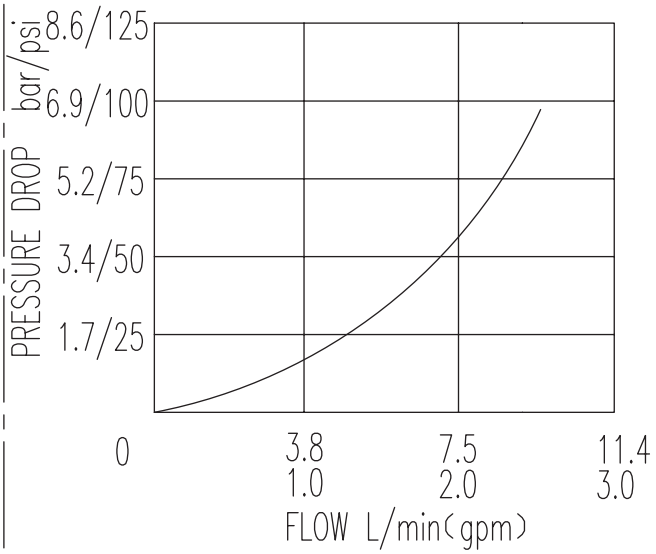

BST08-225 Bidirectional Normally Open

Profile dimensions

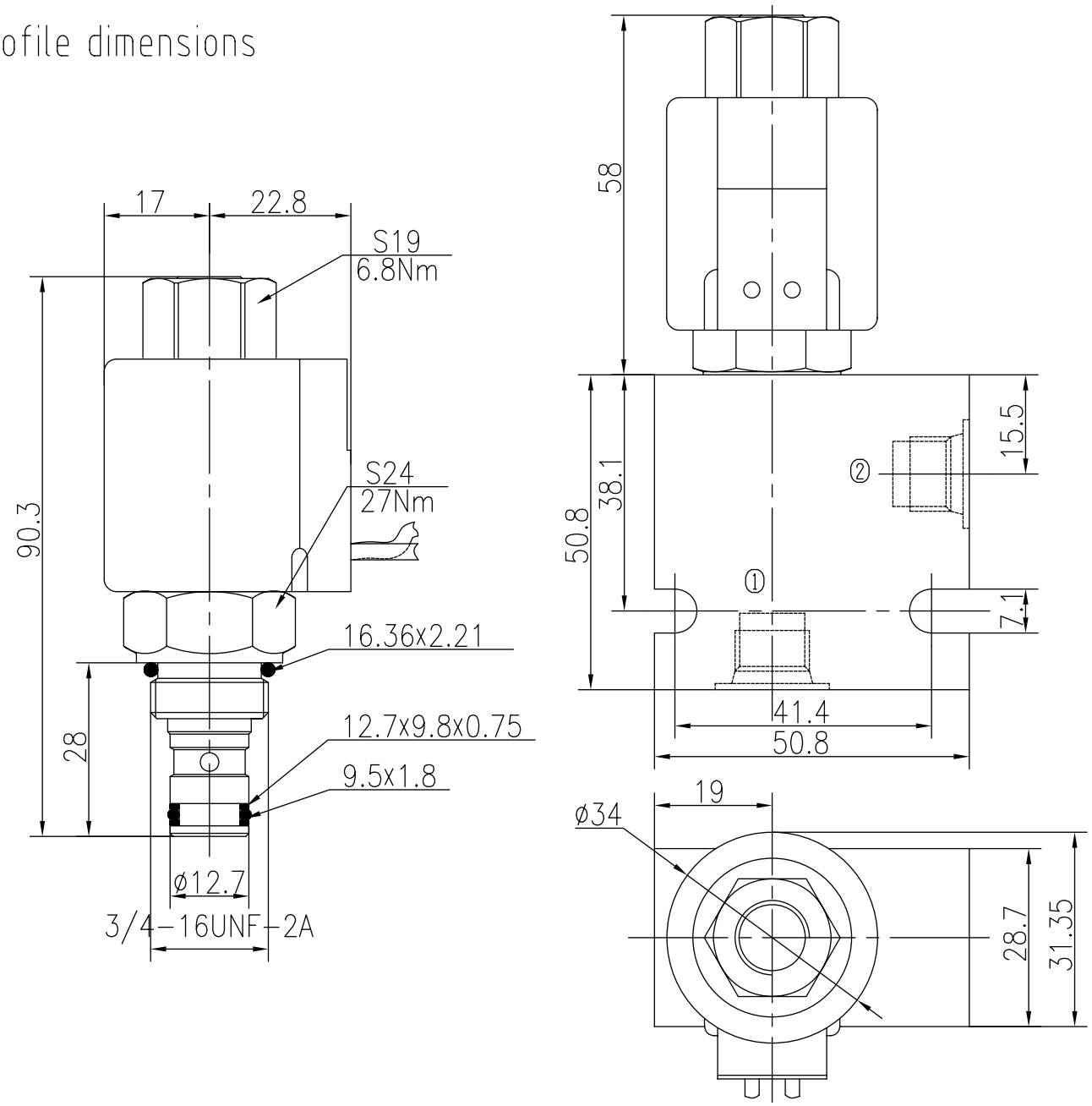

TO ORDER BST08 -225 - - - - -

- Solenoid Valve
- Function
  - None(Blank)
  - Manual Override H
- Body Porting
  - Omit for Cartridge only
  - G1/4 4G
  - G3/8 8G
  - SAE4 4T
  - SAE6 6T
- Seals
  - Buna(Std.) N
  - Fluorocarbon V
- Voltage
  - 12 12VDC
  - 24 24VDC
  - 110 110VAC
  - 220 220VAC
- Connection
  - DL Double Leads
  - DH Electrial Outlet

Two Way Two Position (Poppet-type)

BST08-227 Bidirectional Normally Open

Description of the process

When energized,the valve blocks flow in both directionals,When de-energized,allowing flow from ② to ① and ① to ②.

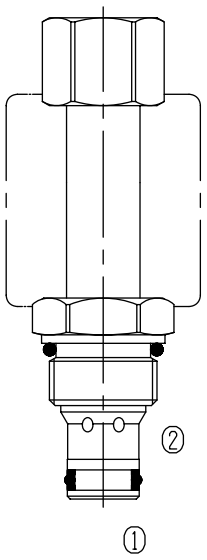

Specifications:

Max. Working Pressure	250bar
Flow Max.	See Performance
Internal Leakage	0.3ml/min at 210bar 5drops/min
Operating Volt	12VDC、24VDC、110VAC、220VAC
Min Voltage Requires	85% of normal voltage
Filtration Of Oil	20μm or better
Type of Standard Cavity	T4-1
Temperature	-30~+100℃ Standard Buna Seals
Standard Block Model	T4-11*/13*/14*/16*

Symbol:

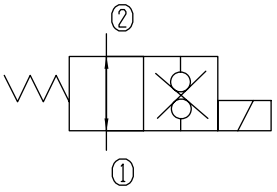

Flow Characteristic: 32 cST Oil/40°C

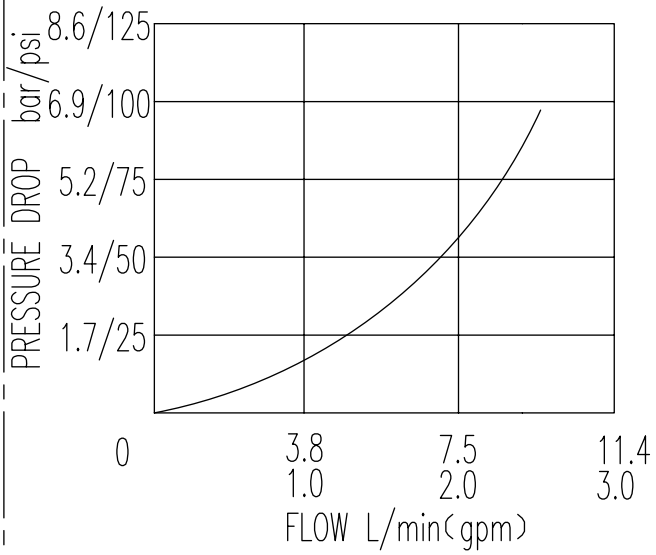

BST08-227 Bidirectional Normally Open

Profile dimensions

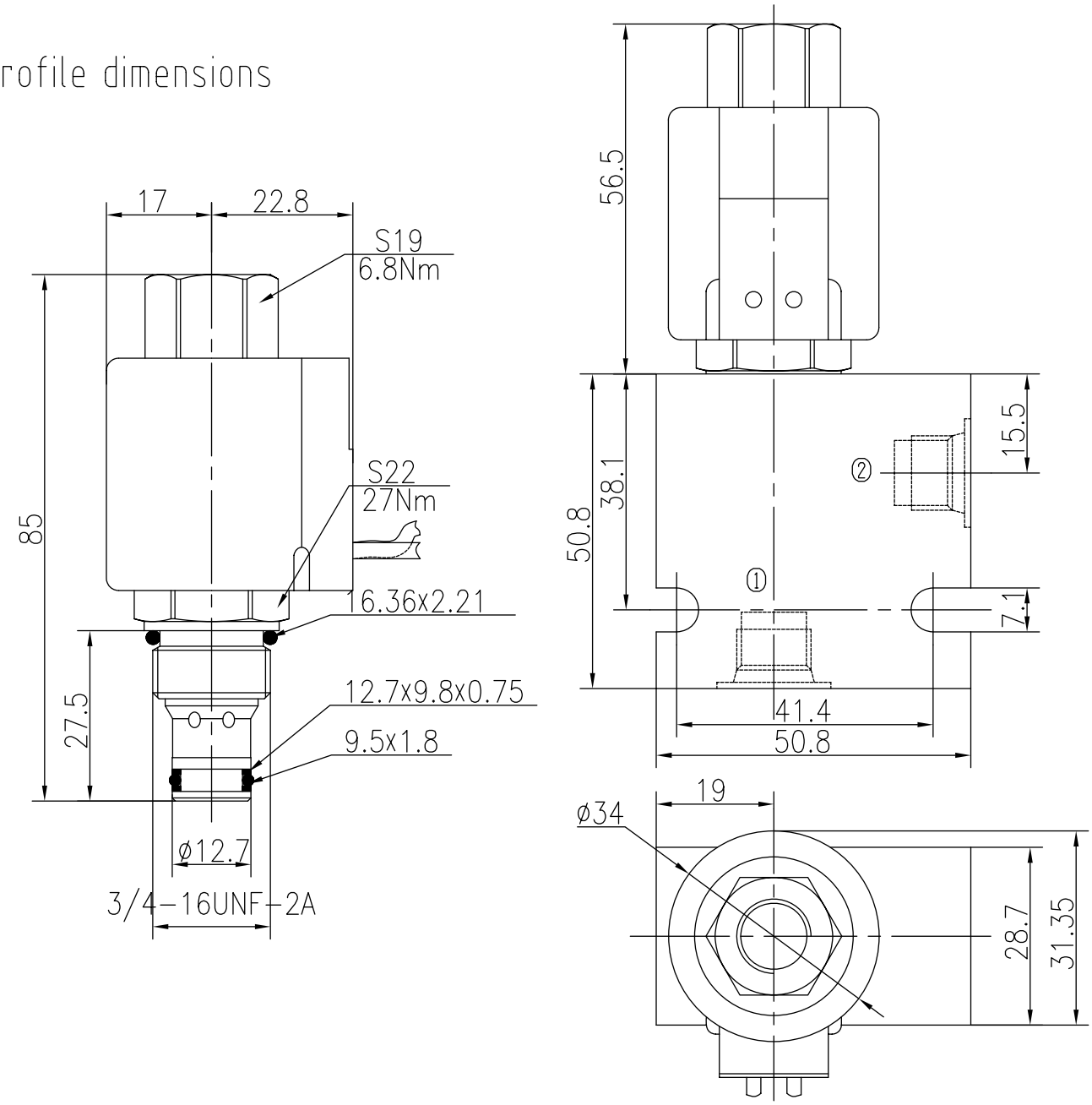

TO ORDER BST08 -227 - - - - -

- Solenoid Valve
  - Function
    - None(Blank)
    - Manual Override H
  - Body Porting
    - Omit for Cartridge only
    - G1/4 4G
    - G3/8 8G
    - SAE4 4T
    - SAE6 6T
- Seals
  - Buna(Std.) N
  - Fluorocarbon V
- Voltage
  - 12 12VDC
  - 24 24VDC
  - 110 110VAC
  - 220 220VAC
- Connection
  - DL Double Leads
  - DH Electrial Outlet

Two Way Two Position(Poppet-type)

BST08-227L Bidirectional Normally Open

Description of the process

When energized,the valve blocks flow in both directionals,
When de-energized,allowing flow from ② to ① and ① to ②.

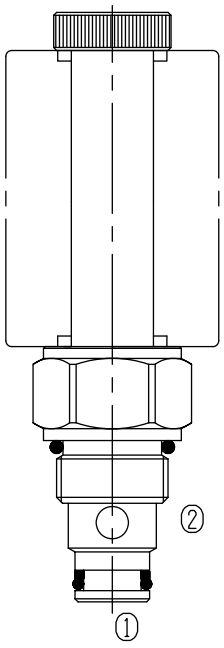

Specifications:

	250bar
Max. Working Pressure	See Performance
Flow Max.	0.3ml/min at 210bar
Internal Leakage	5drops/min
Operating Volt	12VDC、24VDC、110VAC、220VAC
Min Voltage Requires	85% of normal voltage
Filtration Of Oil	20μm or better
Type of Standard Cavity	T4-1
Temperature	-30~+100℃ Standard Buna Seals
Standard Block Model	T4-11*/13*/14*/16*

Symbol:

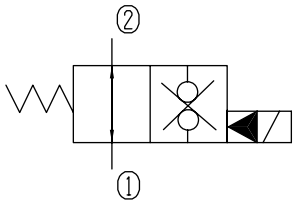

Characteristic: 32 cST Oil/40°C

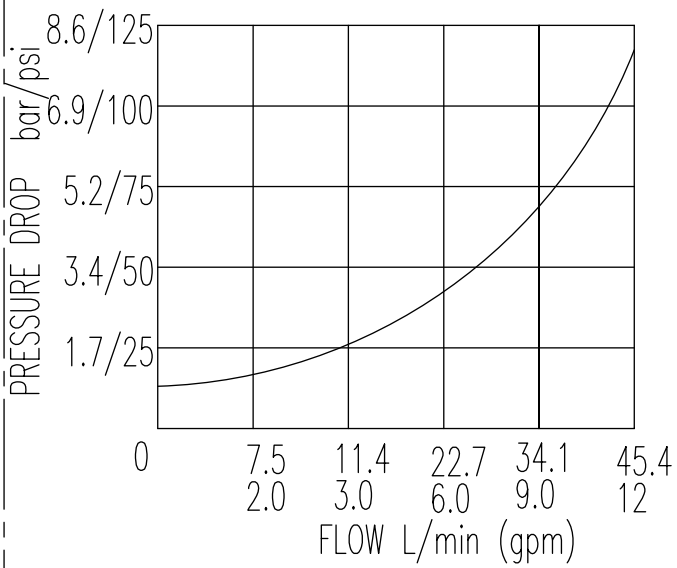

BST08-227L Bidirectional Normally Open

Profile dimensions

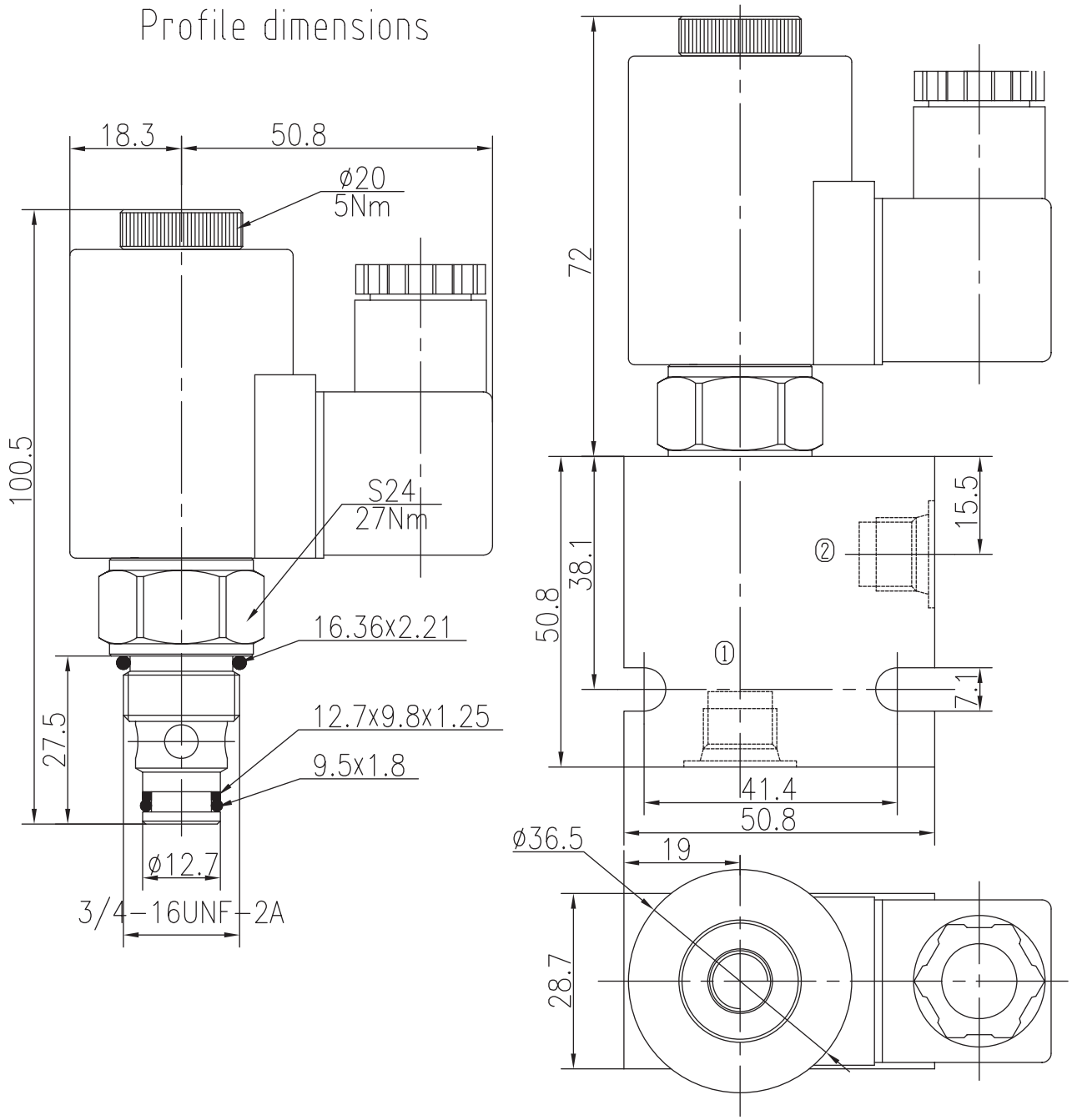

TO ORDER

BST08 -227L - ___ - ___ - ___ - ___

- Solenoid Valve Function
- ☐ Body Porting (Omit for Cartridge only)
- G1/4 4G, G3/8 8G, SAE4 4T, SAE6 6T
- Seals: Buna(Std.) N; Fluorocarbon V
- Voltage: 12 12VDC; 24 24VDC; 110 110VAC; 220 220VAC
- Connection: DL Double Leads; DH Electrial Outlet

Two Way Two Position(Poppet-type)

BST08-228 Bidirectional Normally Closed

Description of the process

When de-energized,the valve blocks flow in both directionals,
When energized,allowing flow from ② to ① and ① to ②.

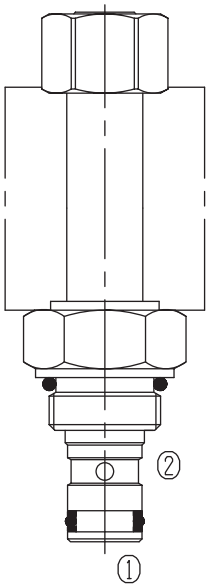

Specifications:

	250bar
Max. Working Pressure	See Performance
Flow Max.	0.3ml/min at 210bar
Internal Leakage	5drops/min
Operating Volt	12VDC、24VDC、110VAC、220VAC
Min Voltage Requires	85% of normal voltage
Filtration Of Oil	20μm or better
Type of Standard Cavity	T4-1
Temperature	-30~+100℃ Standard Buna Seals
Standard Block Model	T4-11*/13*/14*/16*

Symbol:

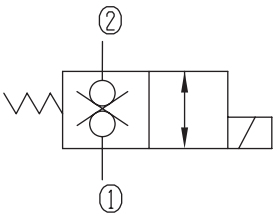

Characteristic: 32 cST Oil/40°C

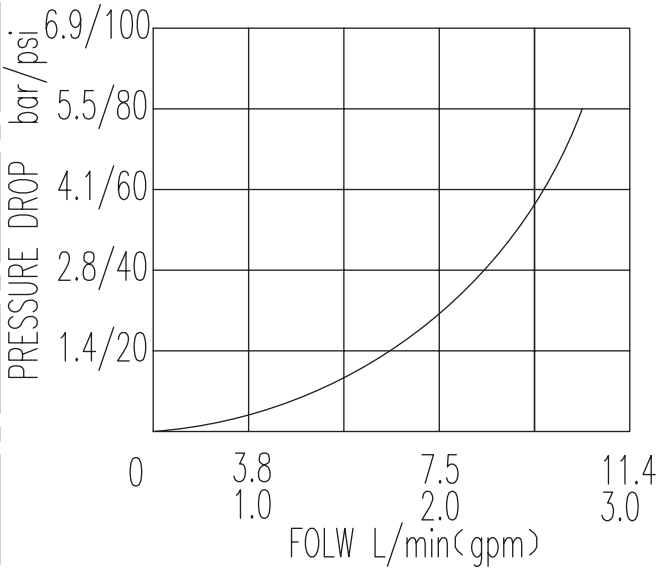

Two Way Two Position (Poppet-type)

BST08-228 Bidirectional Normally Closed

Profile dimensions

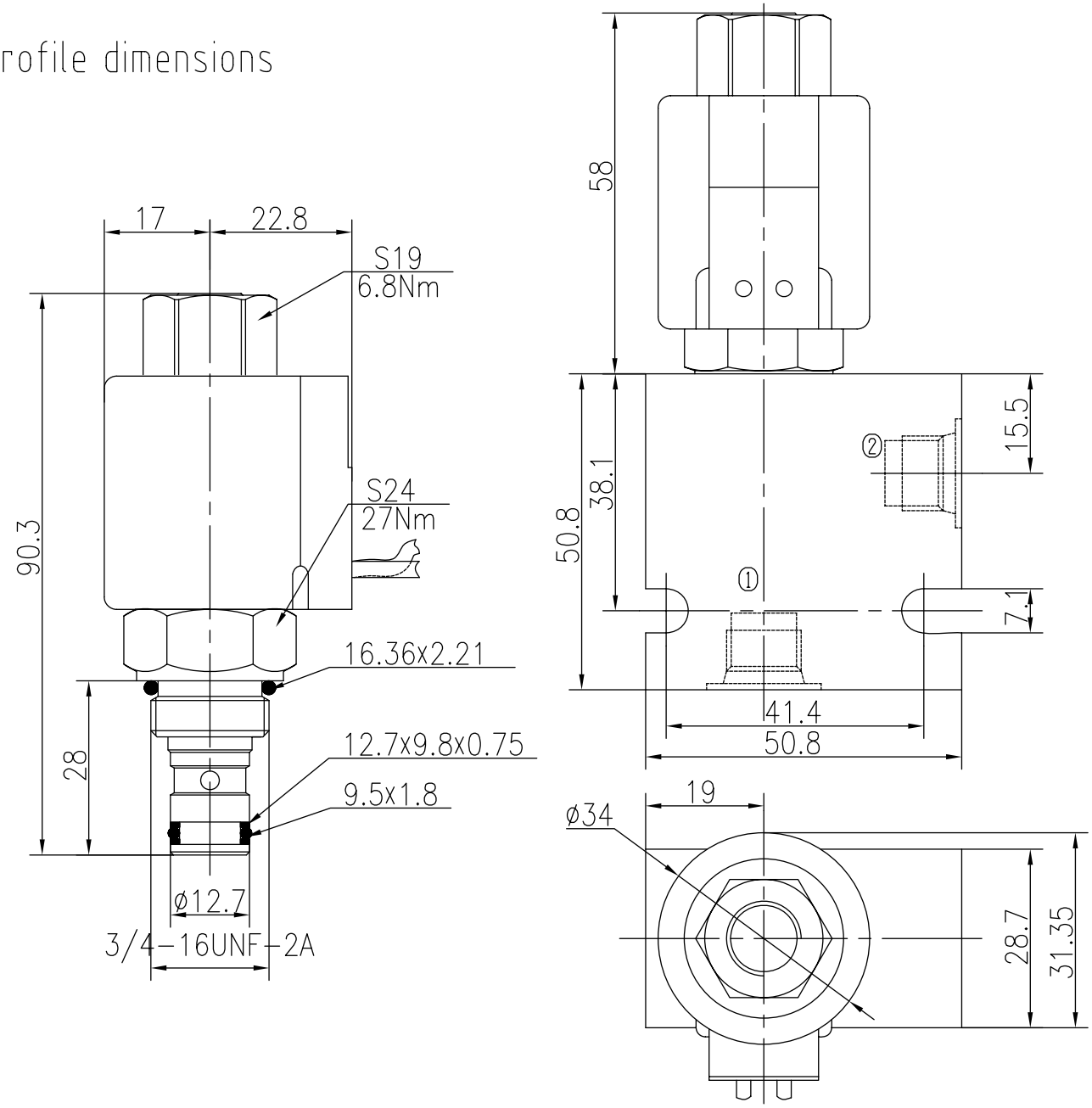

TO ORDER

BST08 -228 - - - -

Solenoid Valve

Function

None(Blank)

Manual Override H

Body Porting

Omit for Cartridge only

G1/4 4G
G3/8 8G
SAE4 4T
SAE6 6T

Seals

Buna(Std.) N

Fluorocarbon V

Voltage

12 12VDC
24 24VDC
110 110VAC
220 220VAC

Connection

DL Double Leads
DH Electrial Outlet

Two Way Two Position(Poppet-type)

BST08-228L Bidirectional Normally Closed

Description of the process

When de-energized,the valve blocks flow in both directionals,
When energized,allowing flow from ② to ① and ① to ②.

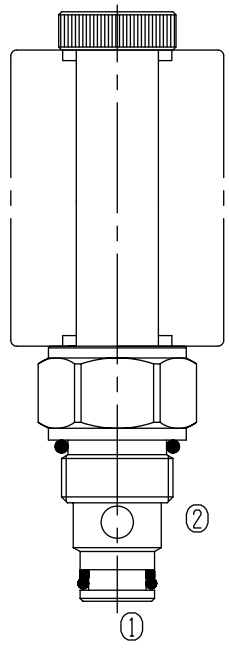

Specifications:

	250bar
Max. Working Pressure	See Performance
Flow Max.	0.3ml/min at 210bar
Internal Leakage	5drops/min
Operating Volt	12VDC、24VDC、110VAC、220VAC
Min Voltage Requires	85% of normal voltage
Filtration Of Oil	20μm or better
Type of Standard Cavity	T4-1
Temperature	-30~+100℃ Standard Buna Seals
Standard Block Model	T4-11*/13*/14*/16*

Symbol:

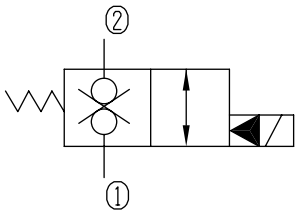

Characteristic: 32 cST Oil/40°C

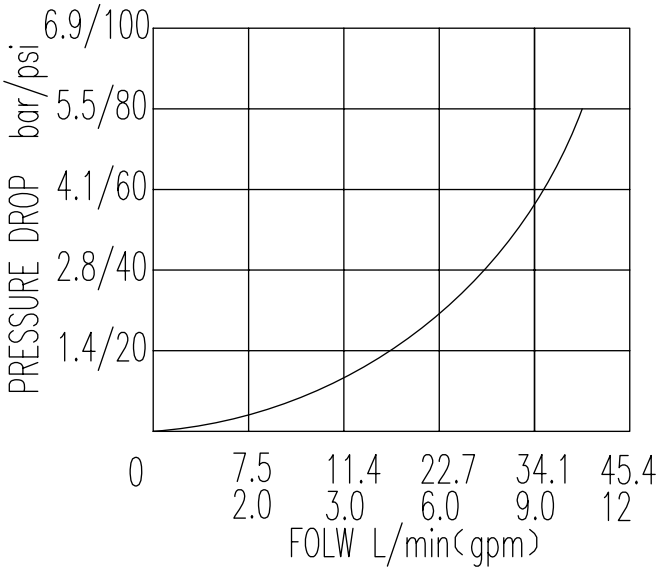

BST08-228L Bidirectional Normally Closed

Profile dimensions

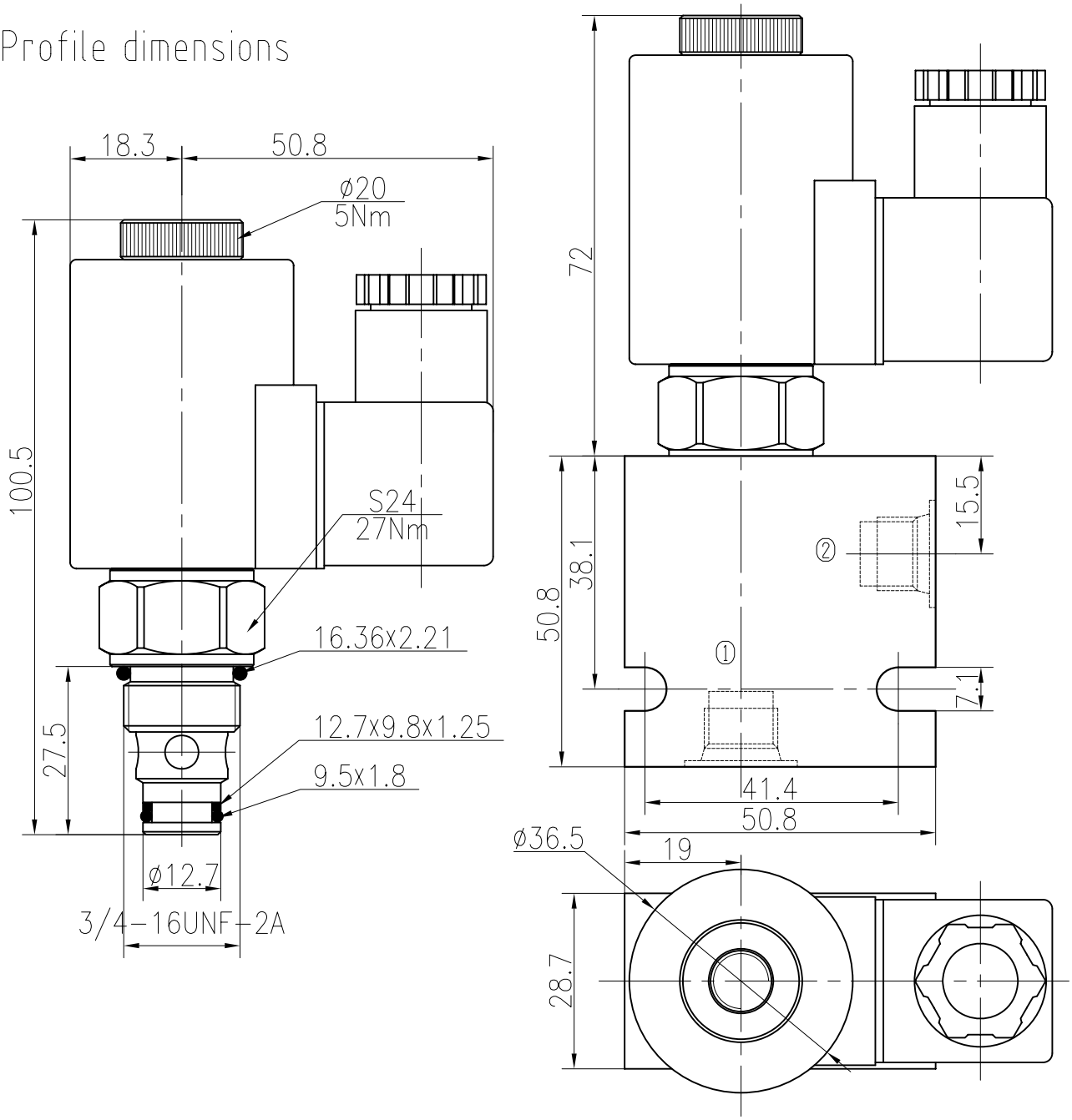

TO ORDER

BST08 -228L - - - -

- Solenoid Valve Function
- Body Porting (Omit for Cartridge only)
  - G1/4 4G
  - G3/8 8G
  - SAE4 4T
  - SAE6 6T
- Seals
  - Buna(Std.) N
  - Fluorocarbon V
- Voltage
  - 12 12VDC
  - 24 24VDC
  - 110 110VAC
  - 220 220VAC
- Connection
  - DL Double Leads(
  - DH Electrial Outlet

Two Way Two Position(Poppet-type)

BST10-220 Normally Closed

Description of the process

When de-energized,the valve acts as a check valve,allowing flow from ① to ②,while blocking flow from ② to ①;When energized,allowing flow from ② to ①,While ① to ② is severely restricted.

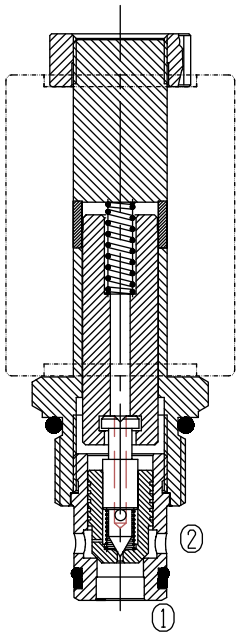

Specifications:

	250bar
Max. Working Pressure	See Performance
Flow Max.	0.3ml/min at 210bar
Internal Leakage	5drops/min
Operating Volt	12VDC、24VDC、110VAC、220VAC
Min Voltage Requires	85% of normal voltage
Filtration Of Oil	20μm or better
Type of Standard Cavity	T5-1
Temperature	-30~+100℃ Standard Buna Seals
Standard Block Model	T5-11*/13*/14*/16*

Symbol:

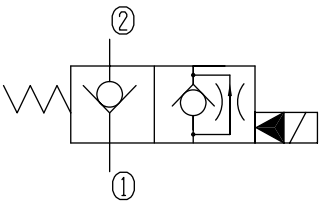

Characteristic:

32 cST Oil/40°C

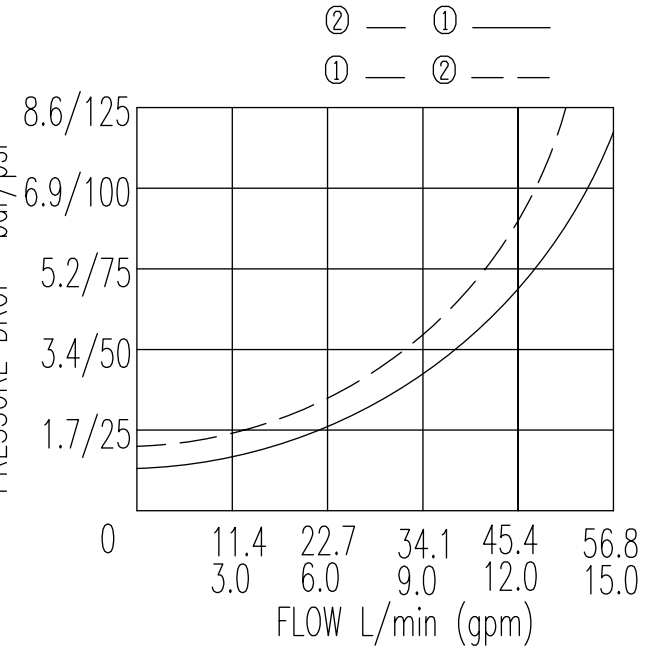

BST10-220 Normally closed

Profile dimensions

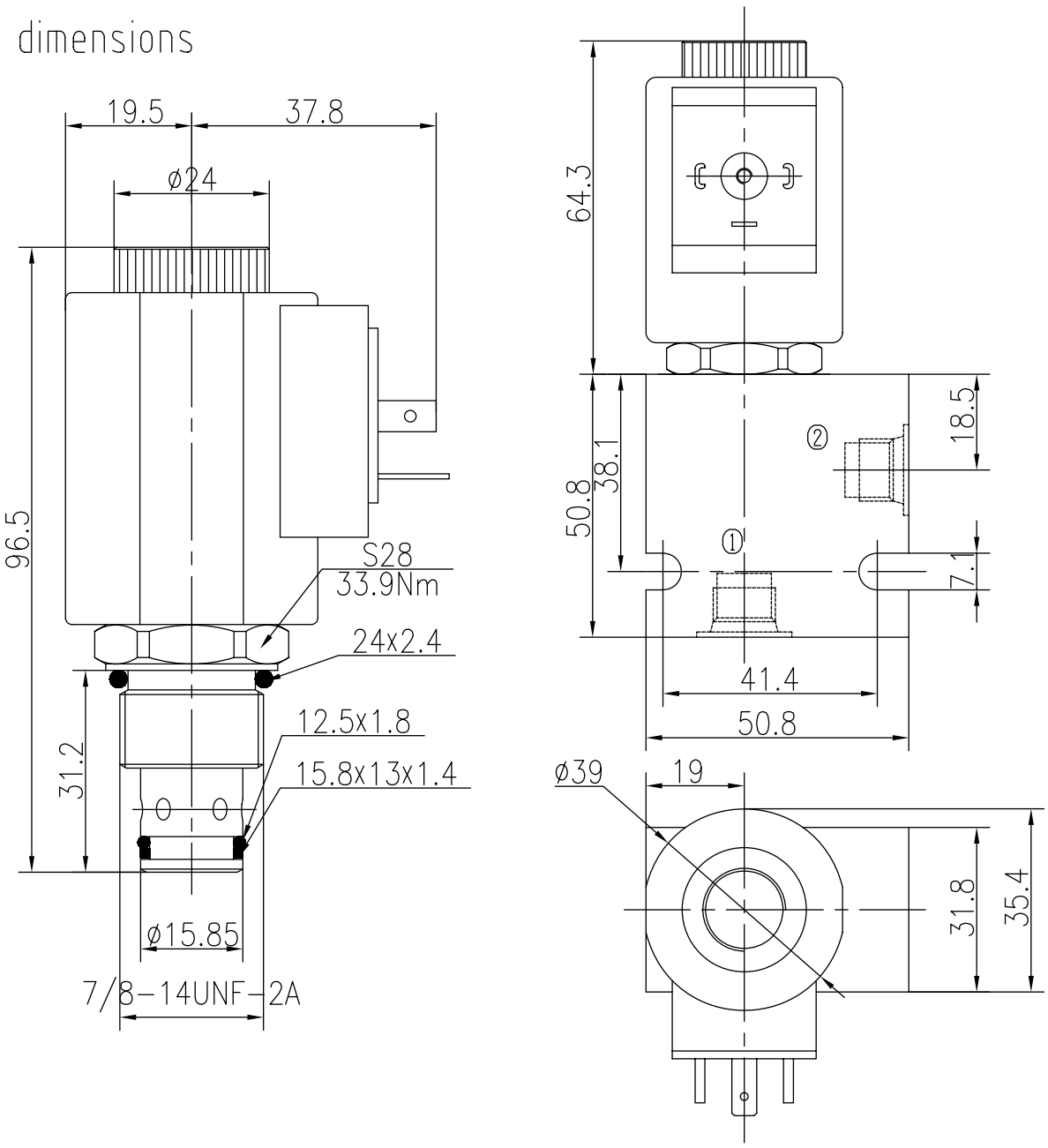

TO ORDER BST10 -220 - - - - -

Solenoid Valve
Function

Body Porting
Omit for Cartridge only

G1/4 4G
G3/8 8G
SAE4 4T
SAE6 6T

Seals
Buna(Std.) N
Fluorocarbon V

Voltage
12 12VDC
24 24VDC
110 110VAC
220 220VAC

Connection
DL Double Leads
DH Electrial Outlet

Two Way Two Position(Poppet-type)

BST10-221 Normally Open

Description of the process

When energized,the valve acts as a check valve, allowing flow from ① to ②,while blocking flow from ② to ①;When de-energized,allowing flow from ② to ①,While ① to ② is severely restricted. To override,push button and remain,the valve blocking flow from ② to ①;Release the button, then the valve allowing flow from ② to ①.

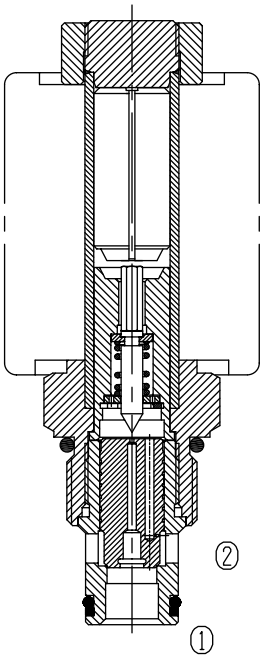

Specifications:

	250bar
Max. Working Pressure	See Performance
Flow Max.	0.3ml/min at 210bar
Internal Leakage	5drops/min
Operating Volt	12VDC、24VDC、110VAC、220VAC
Min Voltage Requires	85% of normal voltage
Filtration Of Oil	20μm or better
Type of Standard Cavity	T5-1
Temperature	-30~+100℃ Standard Buna Seals
Standard Block Model	T5-11*/13*/14*/16*

Symbol:

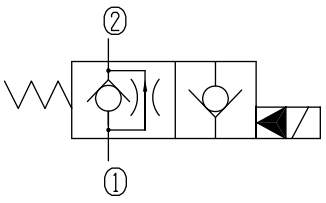

Characteristic:

32 cST Oil/40°C

② — ①——(d)

① — ②— —(e)

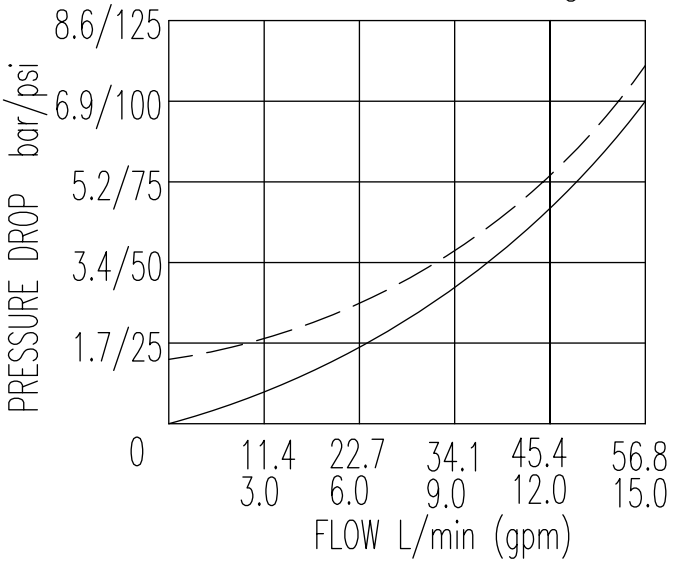

Two Way Two Position (Poppet-type)

BST10-221 Normally Open

Profile dimensions

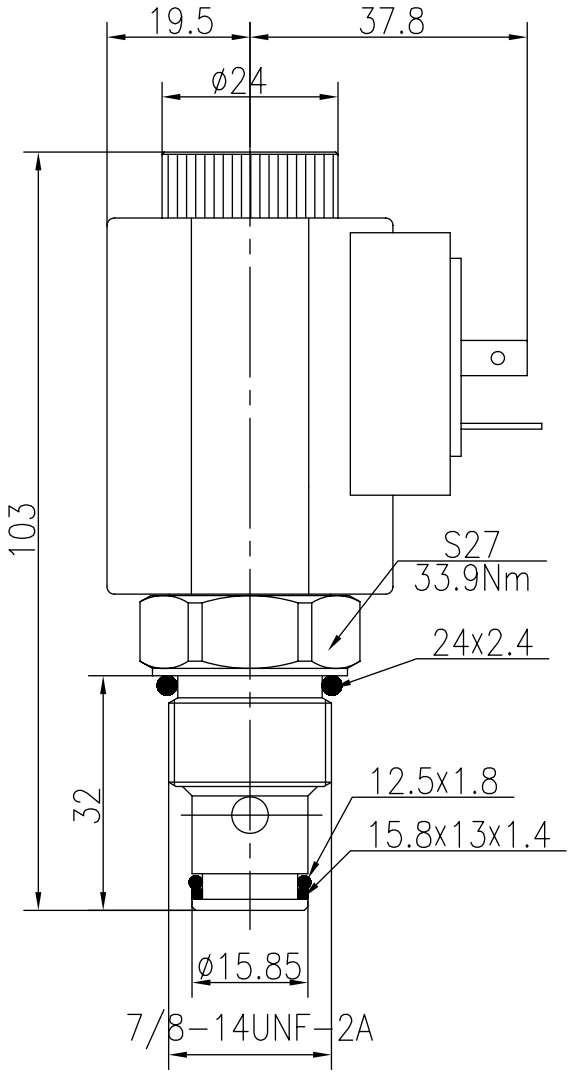

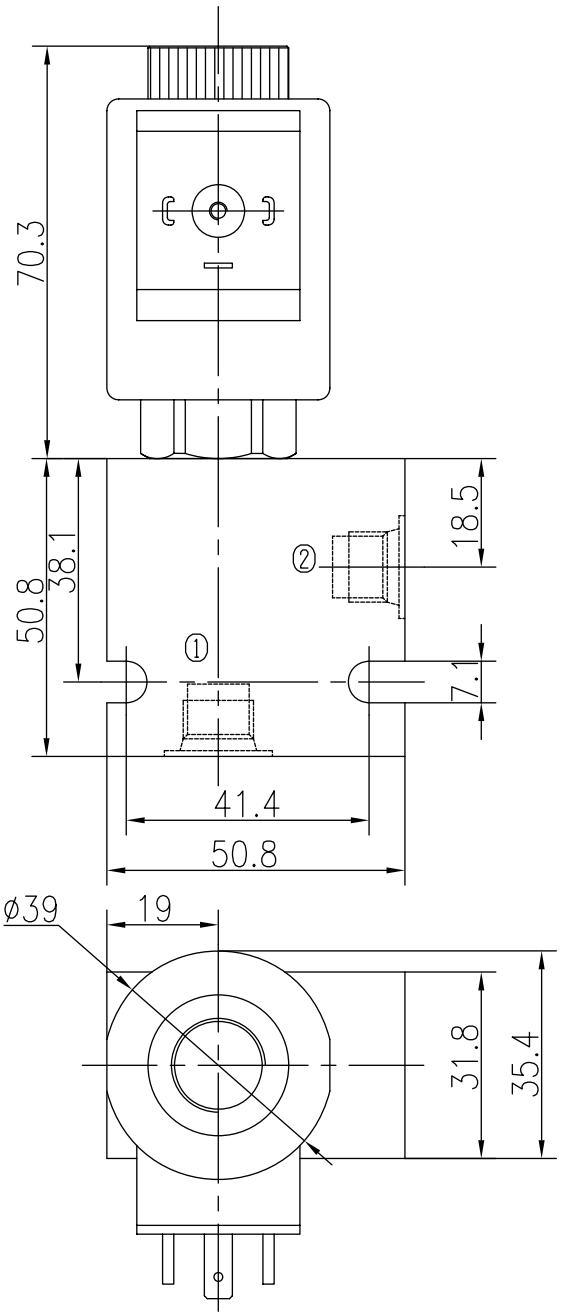

TO ORDER

BST10 -221 - - - - -

- Solenoid Valve Function
  - None(Blank)
  - Manual Override H
  - Body Porting
    - Omit for Cartridge only
    - G1/4 4G
    - G3/8 8G
    - SAE4 4T
    - SAE6 6T
- Seals
  - Buna(Std.) N
  - Fluorocarbon V
- Voltage
  - 12 12VDC
  - 24 24VDC
  - 110 110VAC
  - 220 220VAC
- Connection
  - DL Double Leads
  - DH Electrial Outlet

Two Way Two Position(Poppet-type)

BST10-222 Normally Closed

Description of the process

When de-energized,the valve acts as a check valve,allowing flow from ① to ②, while blocking flow from ② to ①;
When energized,allowing flow from ② to ① and ① to ②.

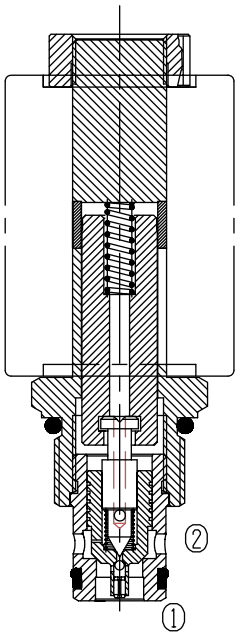

Specifications:

	250bar
Max. Working Pressure	See Performance
Flow Max.	0.3ml/min at 210bar
Internal Leakage	5drops/min
Operating Volt	12VDC、24VDC、110VAC、220VAC
Min Voltage Requires	85% of normal voltage
Filtration Of Oil	20μm or better
Type of Standard Cavity	T5-1
Temperature	-30~+100℃ Standard Buna Seals
Standard Block Model	T5-11*/13*/14*/16*

Symbol:

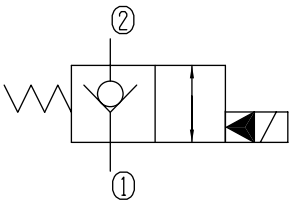

Characteristic:

32 cST Oil/40°C

② — ① —— (e)
① — ② — — (e)

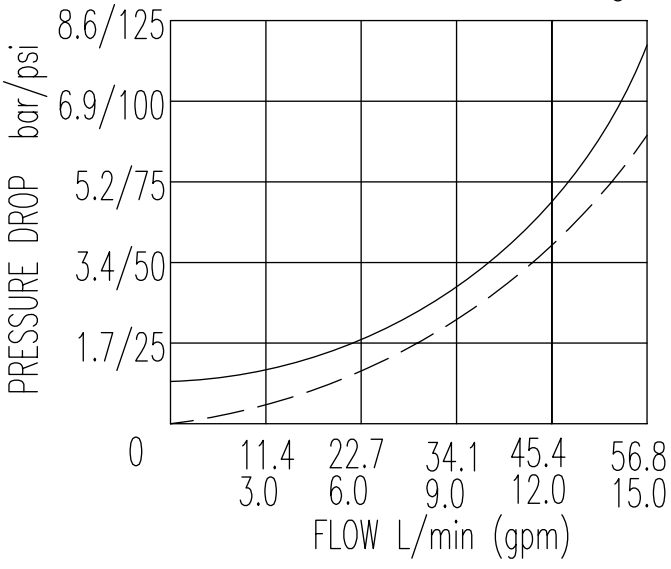

BST10-222 Normally closed

Profile dimensions

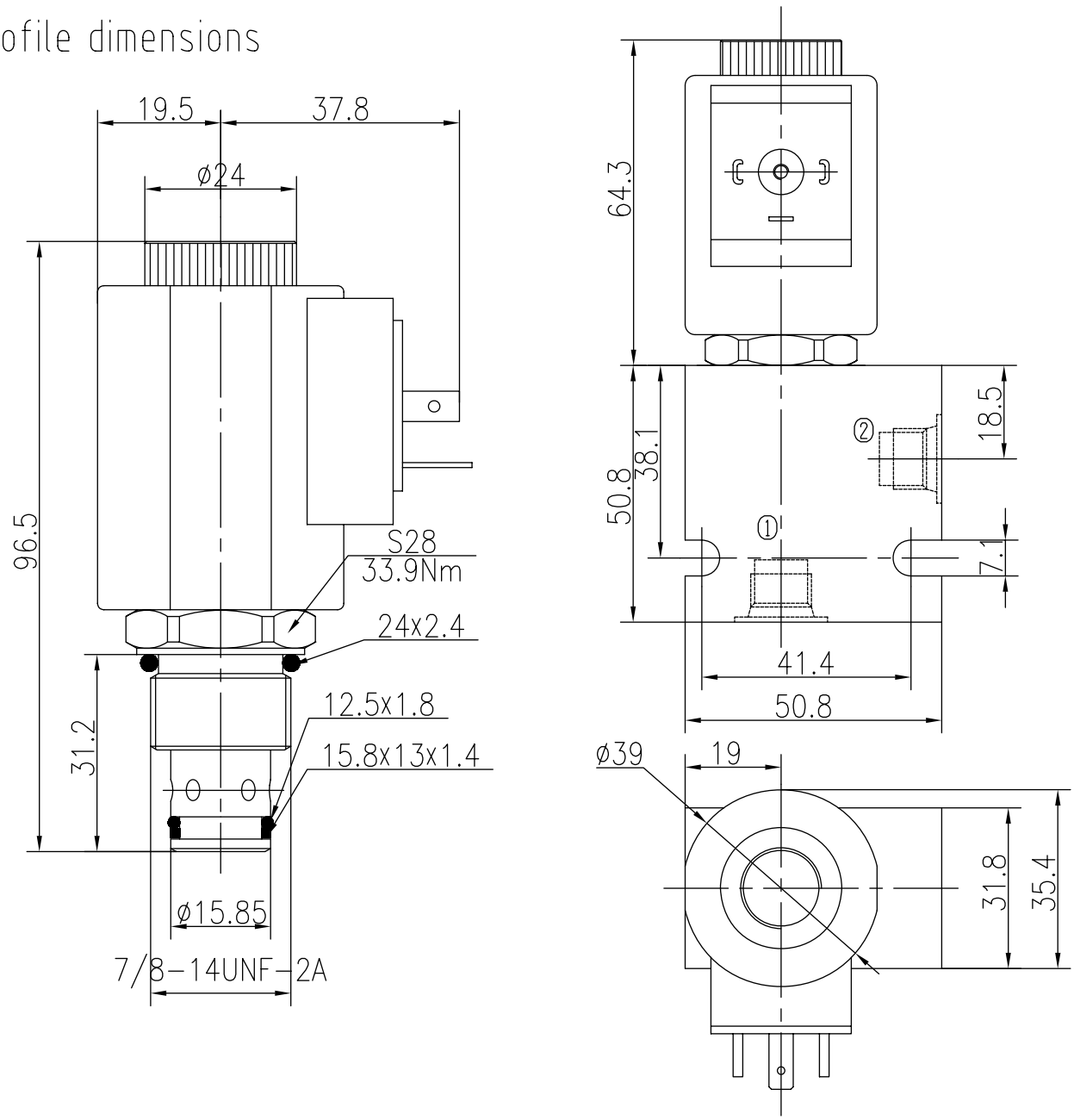

TO ORDER

BST10 -222 - - - - -

- Solenoid Valve Function
- Body Porting (Omit for Cartridge only)
  - G1/4 4G
  - G3/8 8G
  - SAE4 4T
  - SAE6 6T
- Seals
  - Buna(Std.) N
  - Fluorocarbon V
- Voltage
  - 12 12VDC
  - 24 24VDC
  - 110 110VAC
  - 220 220VAC
- Connection
  - DL Double Leads
  - DH Electrial Outlet

Two Way Two Position(Poppet-type)

BST10-223 Normally Open

Description of the process

When energized,the valve acts as a check valve, allowing flow from ① to ②,while blocking flow from ② to ①;When de-energized,allowing flow from ② to ① and ① to ②.To override,push button and remain,the valve blocking flow from ② to ①;Release the button,then the valve allowing flow from ② to ① and ① to ②.

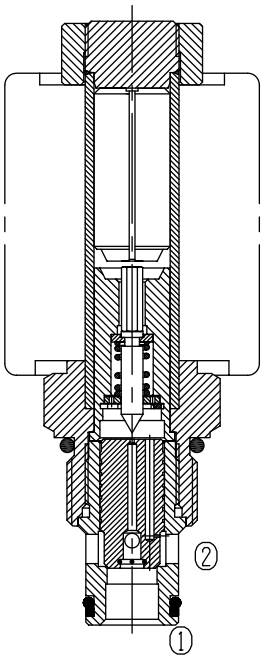

Specifications:

	250bar
Max. Working Pressure	See Performance
Flow Max.	0.3ml/min at 210bar
Internal Leakage	5drops/min
Operating Volt	12VDC、24VDC、110VAC、220VAC
Min Voltage Requires	85% of normal voltage
Filtration Of Oil	20μm or better
Type of Standard Cavity	T5-1
Temperature	-30~+100℃ Standard Buna Seals
Standard Block Model	T5-11*/13*/14*/16*

Symbol:

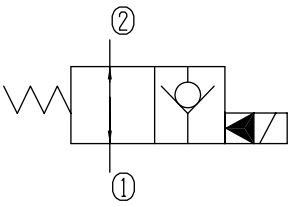

Characteristic:

32 cST Oil/40°C

② — ① —— (d)

① — ② — — (e)

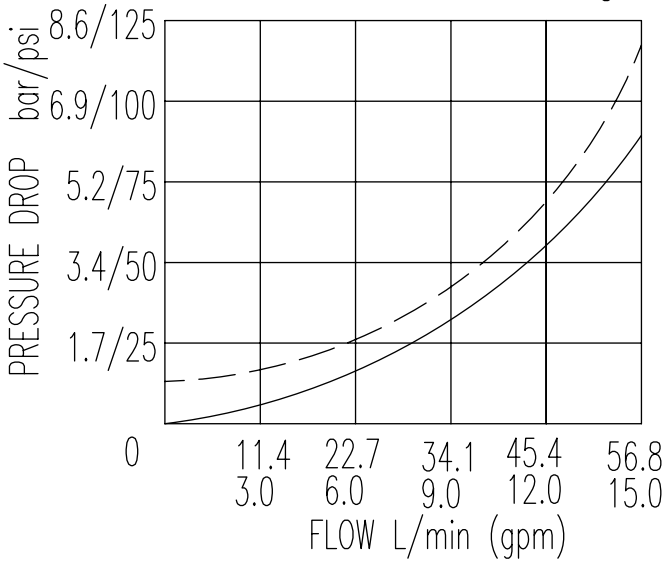

Two Way Two Position (Poppet-type)

BST10-223 Normally Open

Profile dimensions

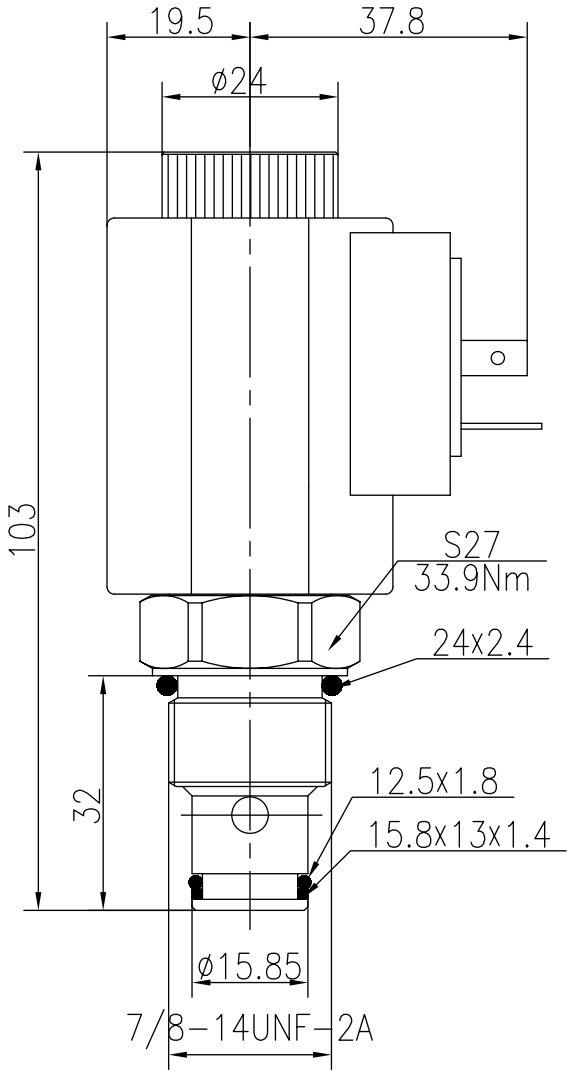

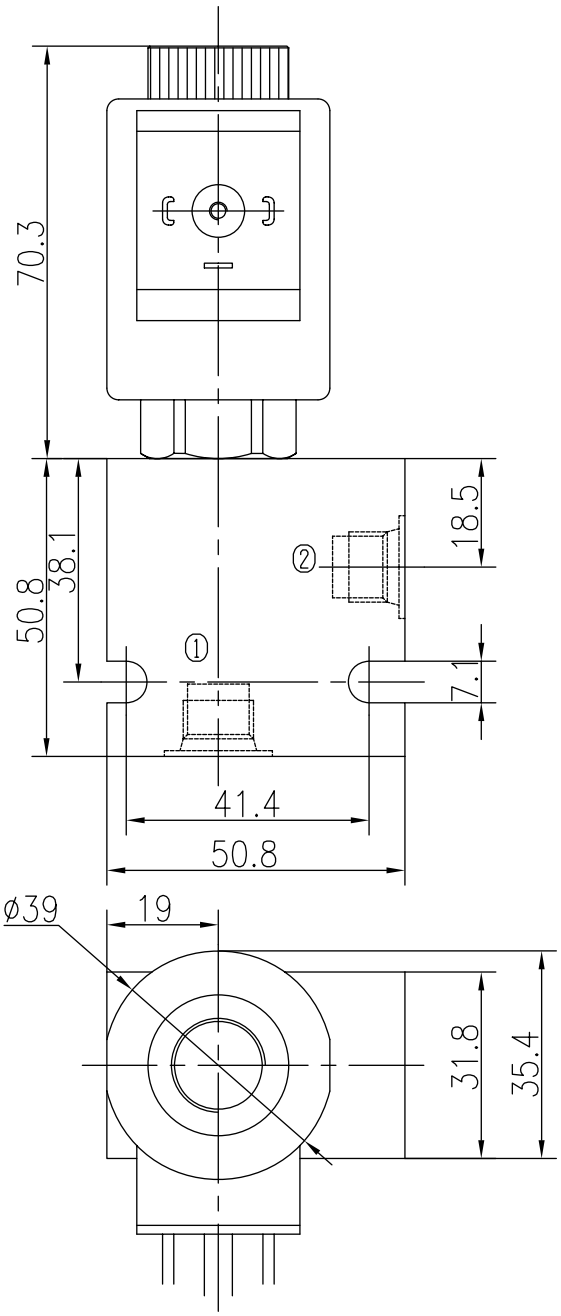

TO ORDER

BST10-223 - - - - -

Solenoid Valve Function		G1/4 4G	Seals	Voltage	
None(Blank)		G3/8 8G			
Manual Override H		SAE4 4T	Buna(Std.) N	12 12VDC	Connection
Body Porting		SAE6 6T		24 24VDC	DL Double Leads
Omit for Cartridge only			Fluorocarbon V	110 110VAC	DH Electrial Outlet
				220 220VAC	

Two Way Two Position(Spool-type)

BST10-224 Bidirectional Normally Closed

Description of the process

When de-energized,the valve blocks flow in both directionals,When energized,allowing flow from ② to ① and ① to ②.

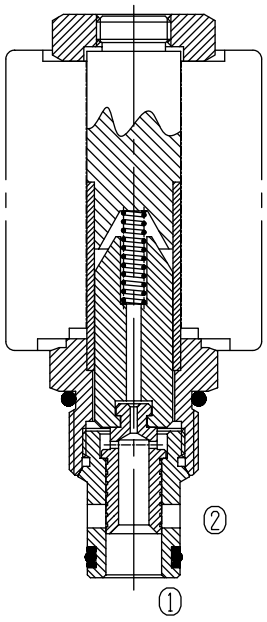

Specifications:

	210bar
Max. Working Pressure	See Performance
Flow Max.	<80ml/min at 210bar
Internal Leakage	5drops/min
Operating Volt	12VDC、24VDC、110VAC、220VAC
Min Voltage Requires	85% of normal voltage
Filtration Of Oil	20μm or better
Type of Standard Cavity	T5-1
Temperature	-30~+100℃ Standard Buna Seals
Standard Block Model	T5-11*/13*/14*/16*

Symbol:

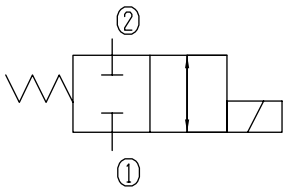

Characteristic: 32 cST Oil/40°C

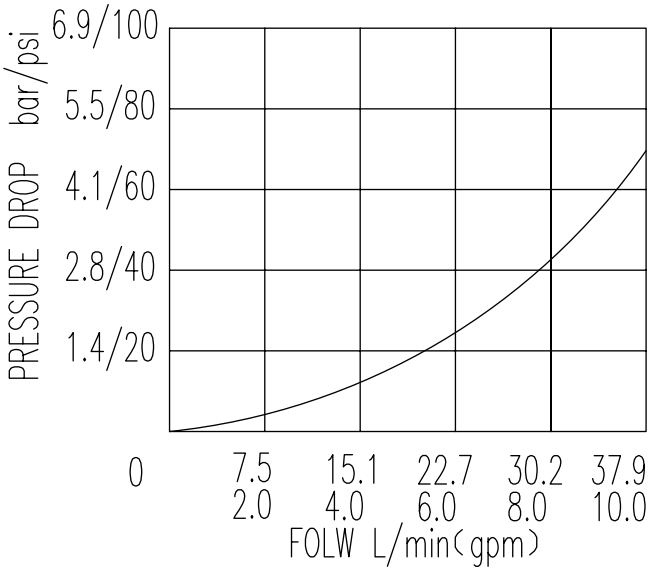

Two Way Two Position (Spool-type)

BST10-224 Bidirectional Normally Closed

Profile dimensions

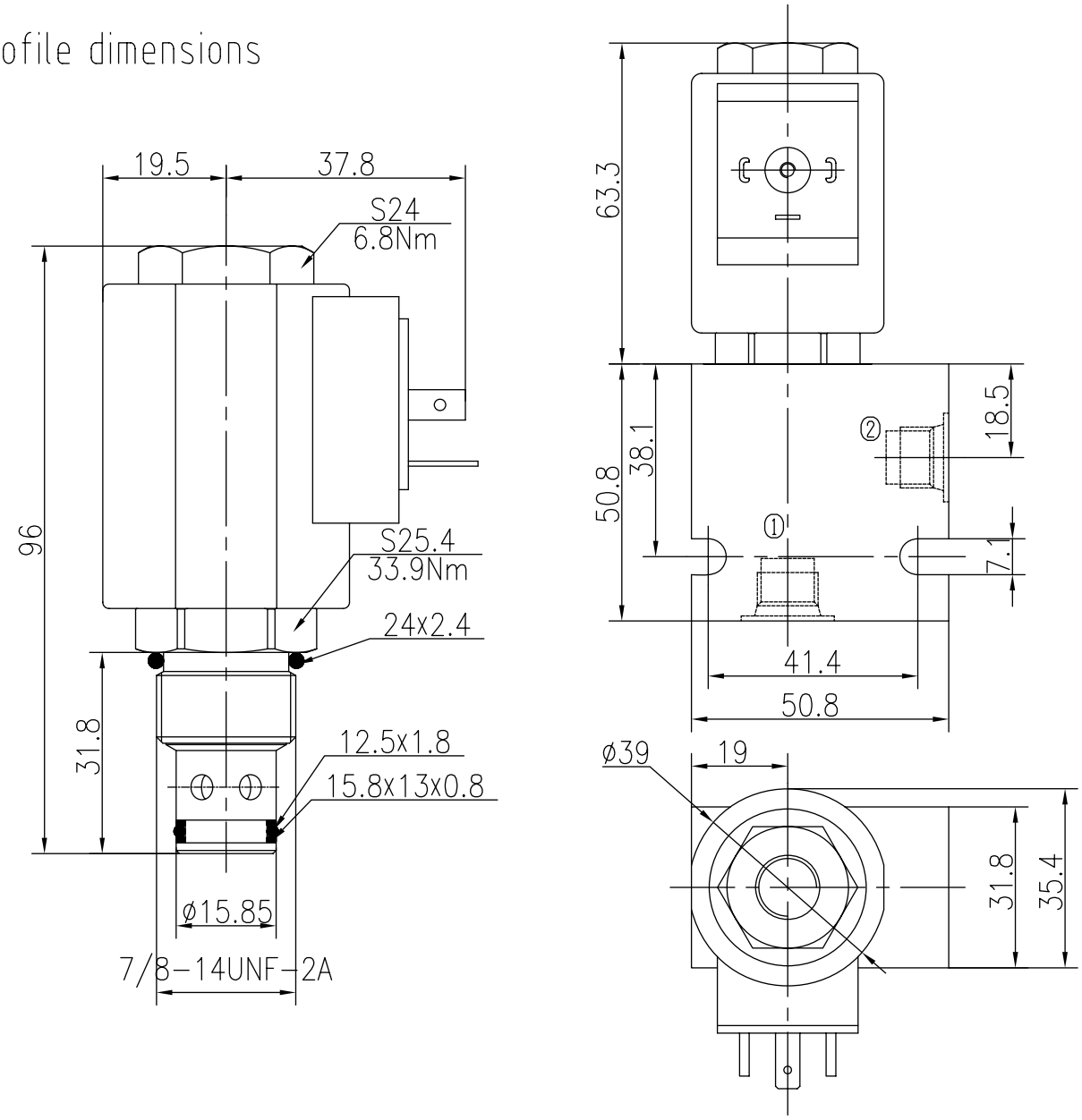

TO ORDER

BST10 -224 - - - -

Solenoid Valve Function

Body Porting
Omit for Cartridge only

G1/4 4G
G3/8 8G
SAE4 4T
SAE6 6T

Seals
Buna(Std.) N
Fluorocarbon V

Voltage
12 12VDC
24 24VDC
110 110VAC
220 220VAC

Connection
DL Double Leads
DH Electrial Outlet

Two Way Two Position(Spool-type)

BST10-225 Bidirectional Normally Open

Description of the process

When energized,the valve blocks flow in both directionals,When de-energized,allowing flow from ② to ① and ① to ②.

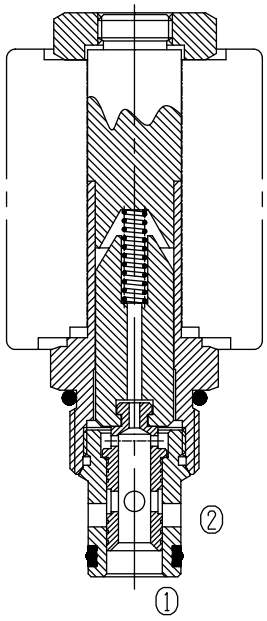

Specifications:

	210bar
Max. Working Pressure	See Performance
Flow Max.	<80ml/min at 210bar
Internal Leakage	5drops/min
Operating Volt	12VDC、24VDC、110VAC、220VAC
Min Voltage Requires	85% of normal voltage
Filtration Of Oil	20μm or better
Type of Standard Cavity	T5-1
Temperature	-30~+100℃ Standard Buna Seals
Standard Block Model	T5-11*/13*/14*/16*

Symbol:

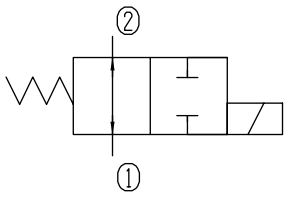

Flow Characteristic: 32 cST Oil/40°C

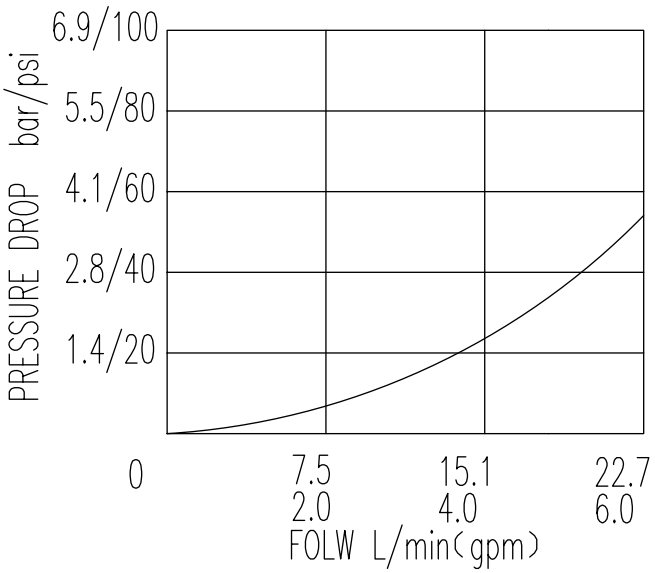

Two Way Two Position (Spool-type)

BST10-225 Bidirectional Normally Open

Profile dimensions

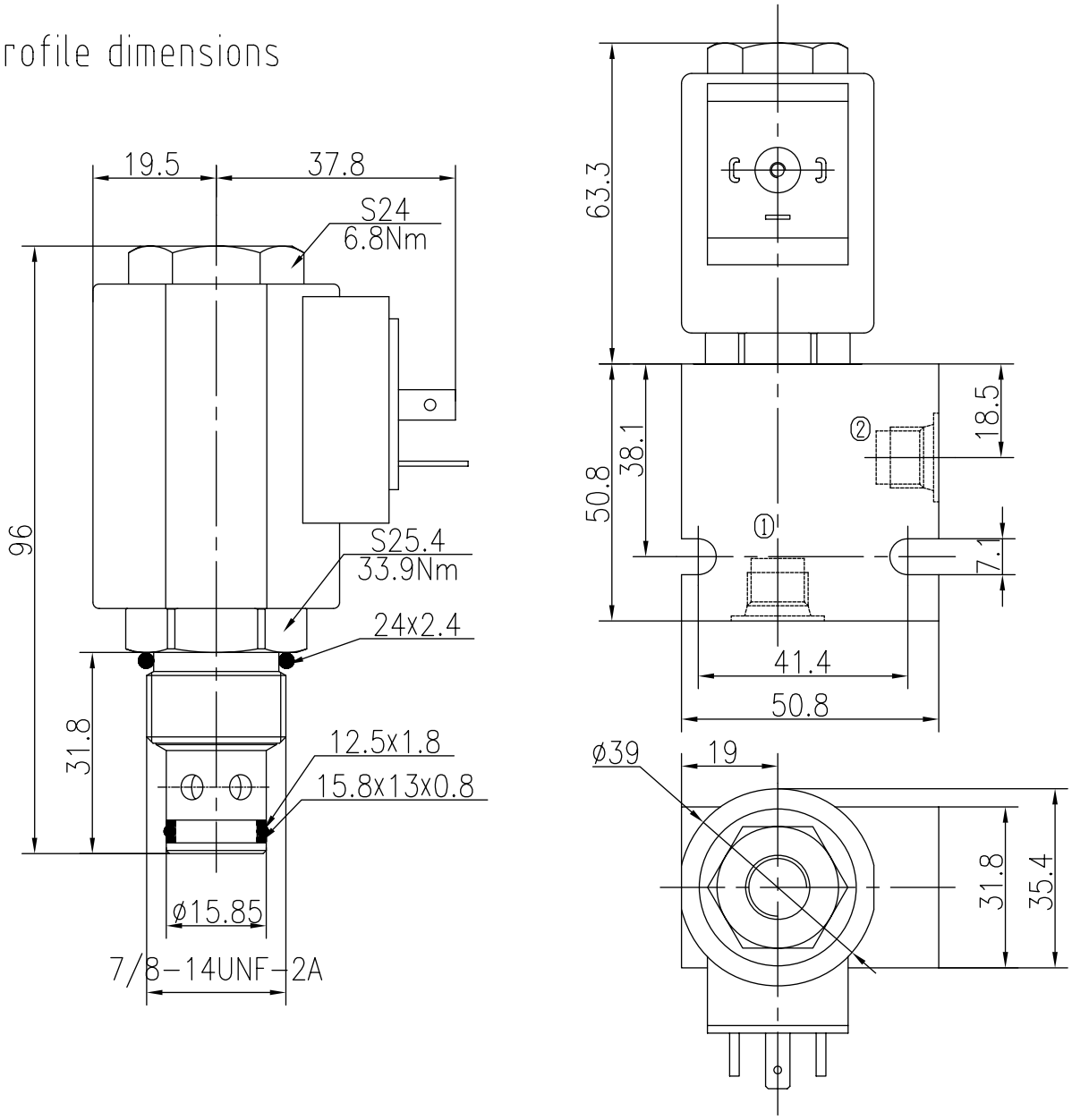

TO ORDER

BST10 - 225 - - - - -

Solenoid Valve Function

Body Porting
Omit for Cartridge only

G1/4 4G
G3/8 8G
SAE4 4T
SAE6 6T

Seals
Buna(Std.) N
Fluorocarbon V

Voltage
12 12VDC
24 24VDC
110 110VAC
220 220VAC

Connection
DL Double Leads
DH Electrial Outlet

Two Way Two Position(Poppet-type)

BST10-227 Bidirectional Normally Open

Description of the process

When energized,the valve blocks flow in both directionals,
When de-energized,allowing flow from ② to ① and ① to ②.

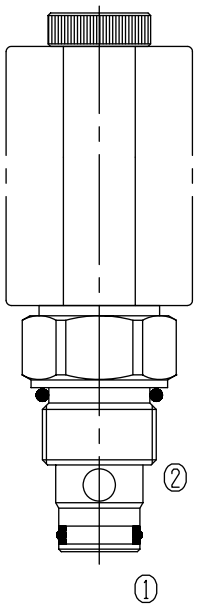

Specifications:

	250bar
Max. Working Pressure	See Performance
Flow Max.	0.3ml/min at 210bar
Internal Leakage	5drops/min
Operating Volt	12VDC、24VDC、110VAC、220VAC
Min Voltage Requires	85% of normal voltage
Filtration Of Oil	20μm or better
Type of Standard Cavity	T5-1
Temperature	-30~+100℃ Standard Buna Seals
Standard Block Model	T5-11*/13*/14*/16*

Symbol:

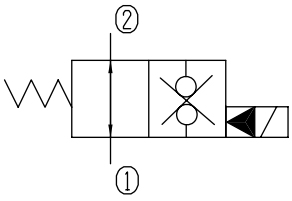

Characteristic:

32 cST Oil/40°C

② — ① —— (d)
① — ② — — (e)

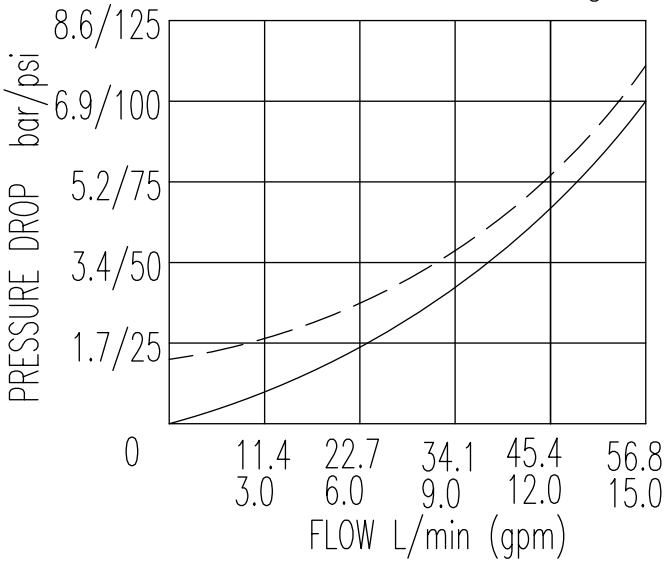

BST10-227 Bidirectional Normally Open

Profile dimensions

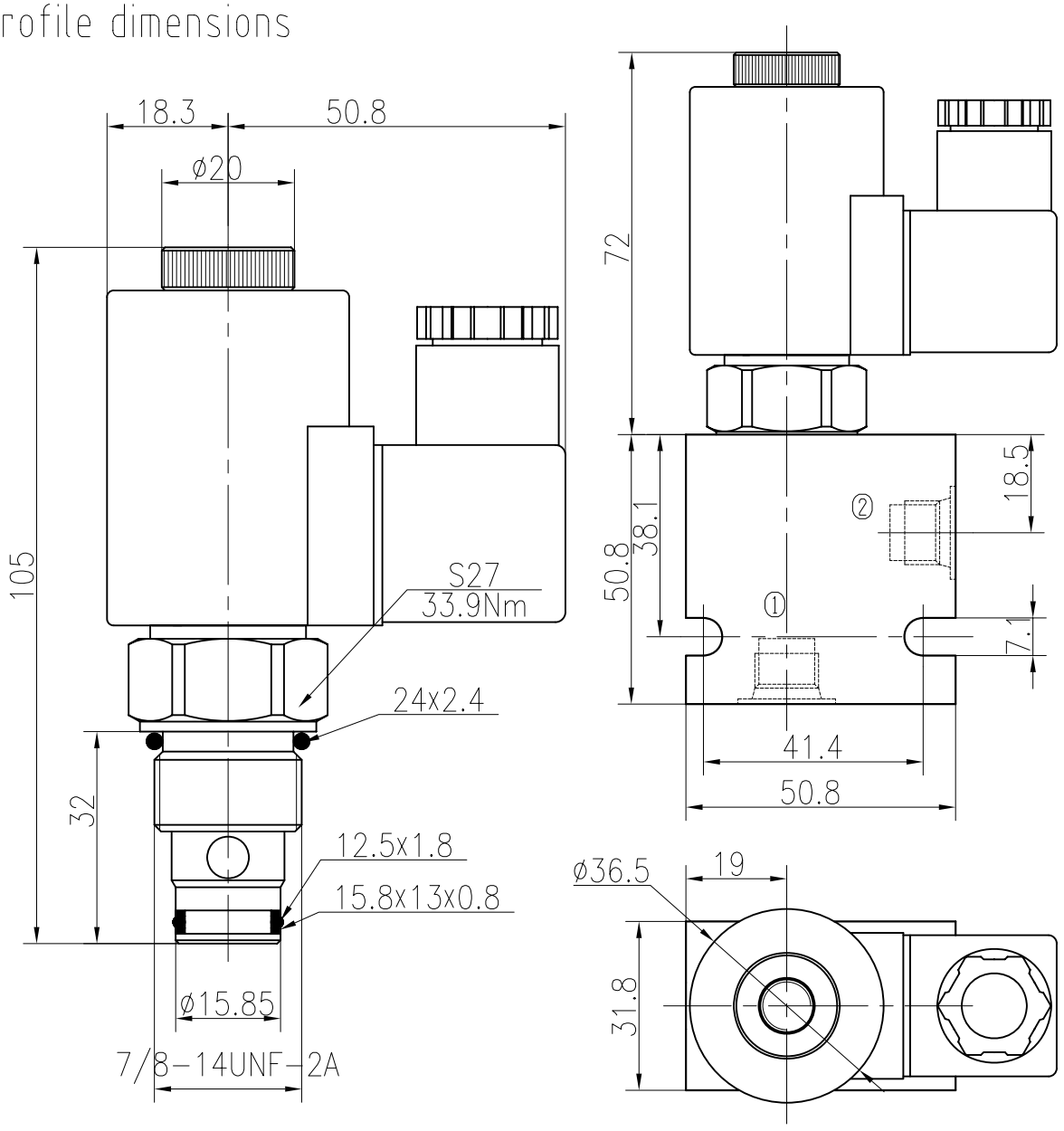

TO ORDER

BST10-227 - - - - -

Solenoid Valve
Function

Body Porting
Omit for Cartridge only

G1/4 4G
G3/8 8G
SAE4 4T
SAE6 6T

Seals
Buna(Std.) N
Fluorocarbon V

Voltage
12 12VDC
24 24VDC
110 110VAC
220 220VAC

Connection
DL Double Leads
DH Electrial Outlet

Two Way Two Position(Poppet-type)

BST10-228 Bidirectional Normally Closed

Description of the process

When energized,the valve blocks flow in both directionals,
When de-energized,allowing flow from ② to ① and ① to ②.

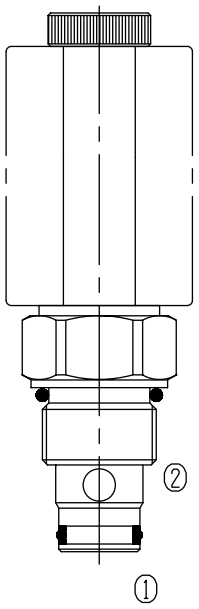

Specifications:

	250bar
Max. Working Pressure	See Performance
Flow Max.	0.3ml/min at 210bar
Internal Leakage	5drops/min
Operating Volt	12VDC、24VDC、110VAC、220VAC
Min Voltage Requires	85% of normal voltage
Filtration Of Oil	20μm or better
Type of Standard Cavity	T5-1
Temperature	-30~+100℃ Standard Buna Seals
Standard Block Model	T5-11*/13*/14*/16*

Symbol:

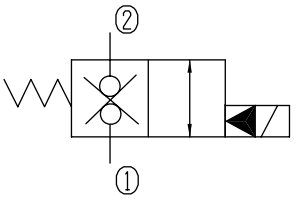

Characteristic: 32 cST Oil/40°C

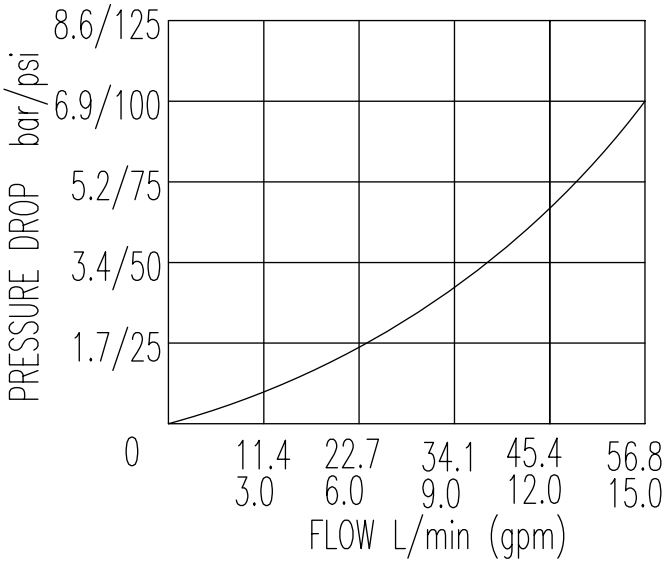

BST10-228 Bidirectional Normally Closed

Profile dimensions

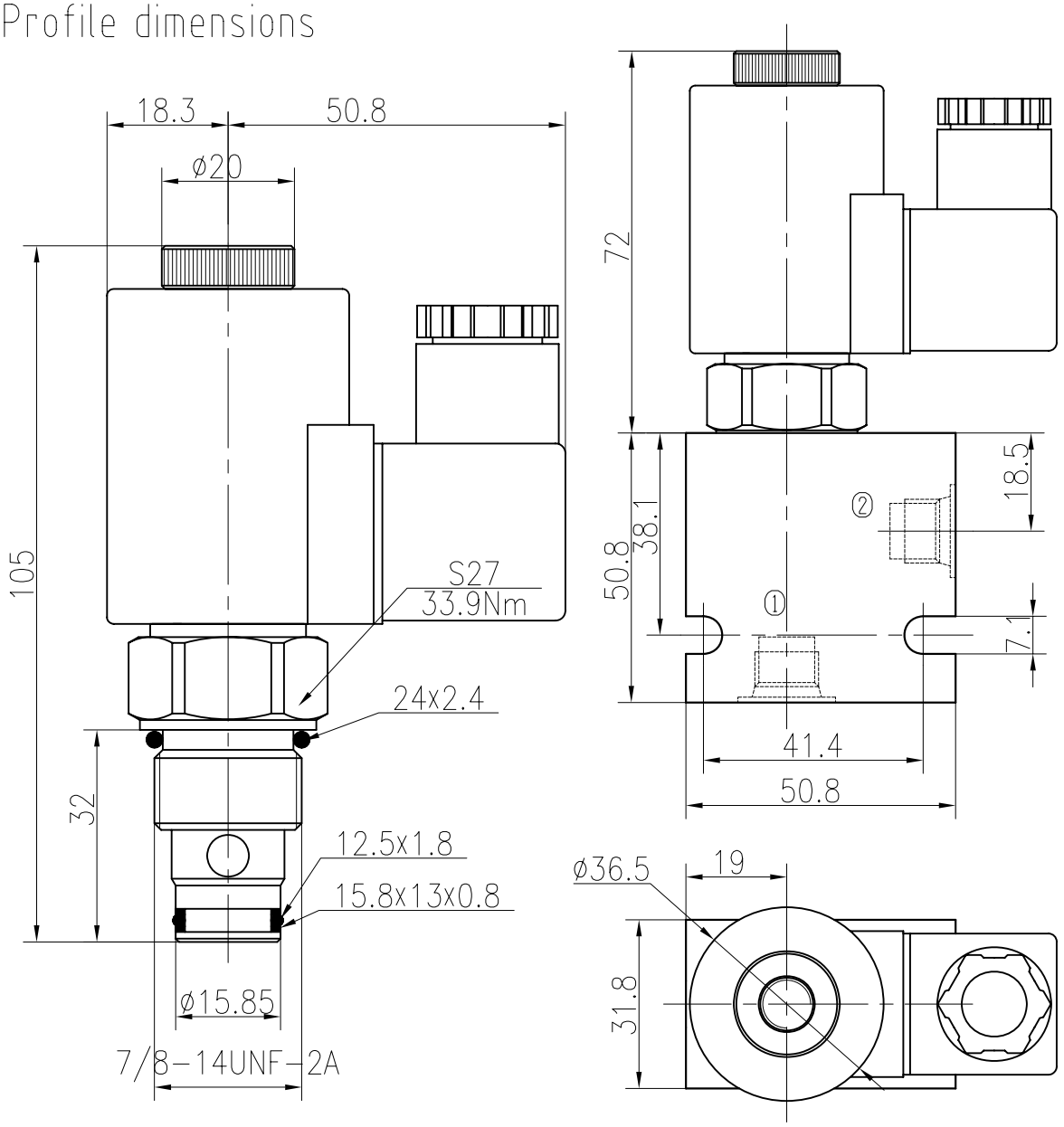

TO ORDER

BST10 - 228 - - - - -

Solenoid Valve
Function

Body Porting
Omit for Cartridge only

G1/4 4G
G3/8 8G
SAE4 4T
SAE6 6T

Seals
Buna(Std.) N
Fluorocarbon V

Voltage
12 12VDC
24 24VDC
110 110VAC
220 220VAC

Connection
DL Double Leads
DH Electrial Outlet

Two Way Two Position(Poppet-type)

BST12-220 Normally Closed

Description of the process

When de-energized,the valve acts as a check valve,allowing flow from ① to ②,while blocking flow from ② to ①;When energized,allowing flow from ② to ①,While ① to ② is severely restricted.

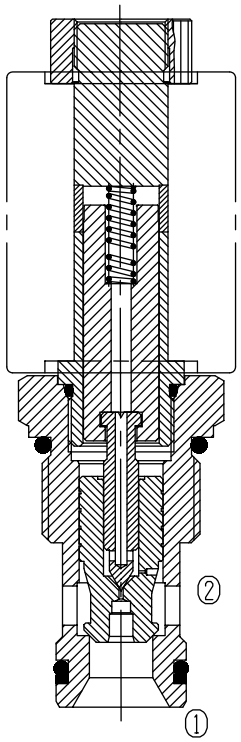

Specifications:

Max. Working Pressure	250bar
Flow Max.	See Performance
Internal Leakage	0.3ml/min at 210bar
Operating Volt	5drops/min
Min Voltage Requires	12VDC、24VDC、110VAC、220VAC
Filtration Of Oil	85% of normal voltage
Type of Standard Cavity	20μm or better
Temperature	T6-1
Standard Block Model	-30~+100℃ Standard Buna Seals
	T6-11*/13*/14*/16*

Symbol:

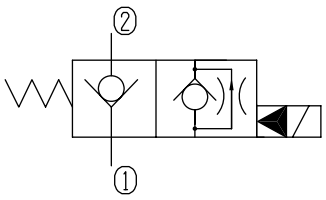

Characteristic:

32 cST Oil/40°C

② — ① ——(e)

① — ② — —(d)

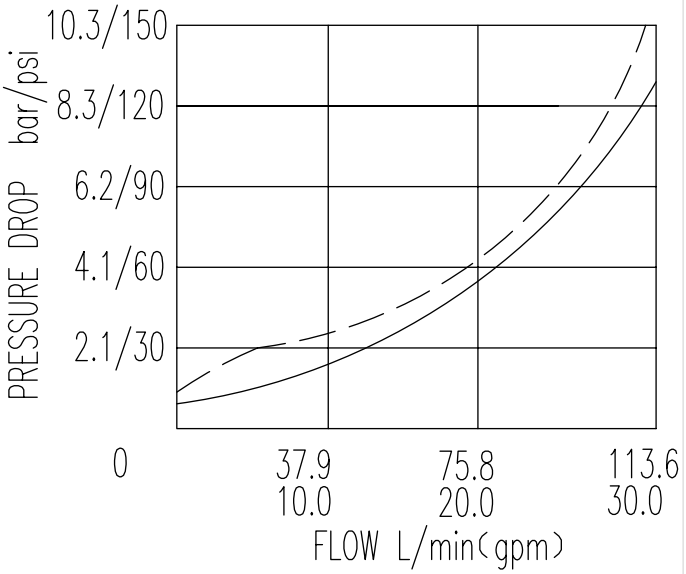

BST12-220 Normally Closed

Profile dimensions

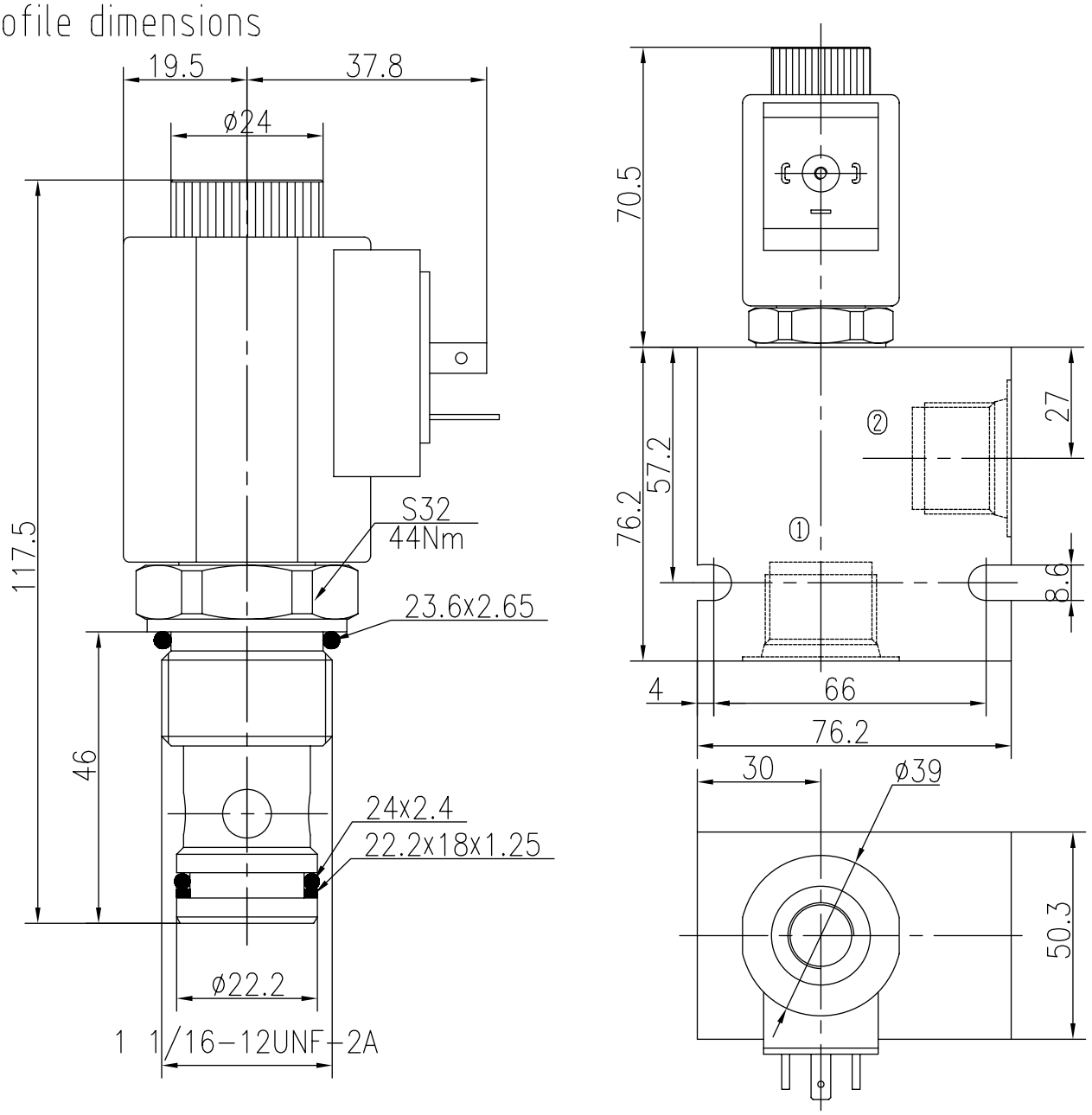

TO ORDER

BST12 - 220 - - - - -

Solenoid Valve Function

Body Porting
Omit for Cartridge only

G3/4 5G
G1 6G
SAE10 10T
SAE12 12T

Seals
Buna(Std.) N
Fluorocarbon V

Voltage
12 12VDC
24 24VDC
110 110VAC
220 220VAC

Connection
DL Double Leads
DH Electrial Outlet

Two Way Two Position(Poppet-type)

BST12-221 Normally Open

Description of the process

When energized,the valve acts as a check valve, allowing flow from ① to ②,while blocking flow from ② to ①;When de-energized,allowing flow from ② to ①,While ① to ② is severely restricted. To override,push button and remain,the valve blocking flow from ② to ①;Release the button, then the valve allowing flow from ② to ①.

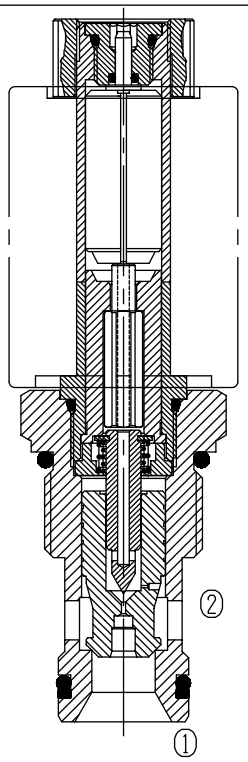

Specifications:

	250bar
Max. Working Pressure	See Performance
Flow Max.	0.3ml/min at 210bar
Internal Leakage	5drops/min
Operating Volt	12VDC、24VDC、110VAC、220VAC
Min Voltage Requires	85% of normal voltage
Filtration Of Oil	20μm or better
Type of Standard Cavity	T6-1
Temperature	-30~+100℃ Standard Buna Seals
Standard Block Model	T6-11*/13*/14*/16*

Symbol:

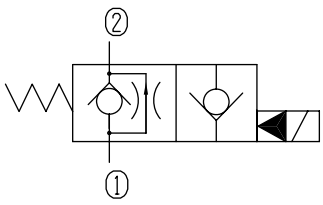

Characteristic:

32 cST Oil/40°C

② — ① —— (d)

① — ② — — (e)

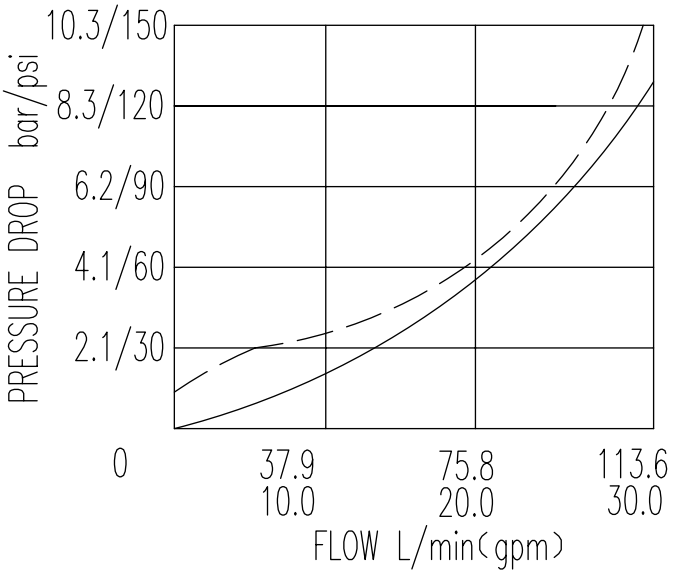

Two Way Two Position (Poppet-type)

BST12-221 Normally Open

Profile dimensions

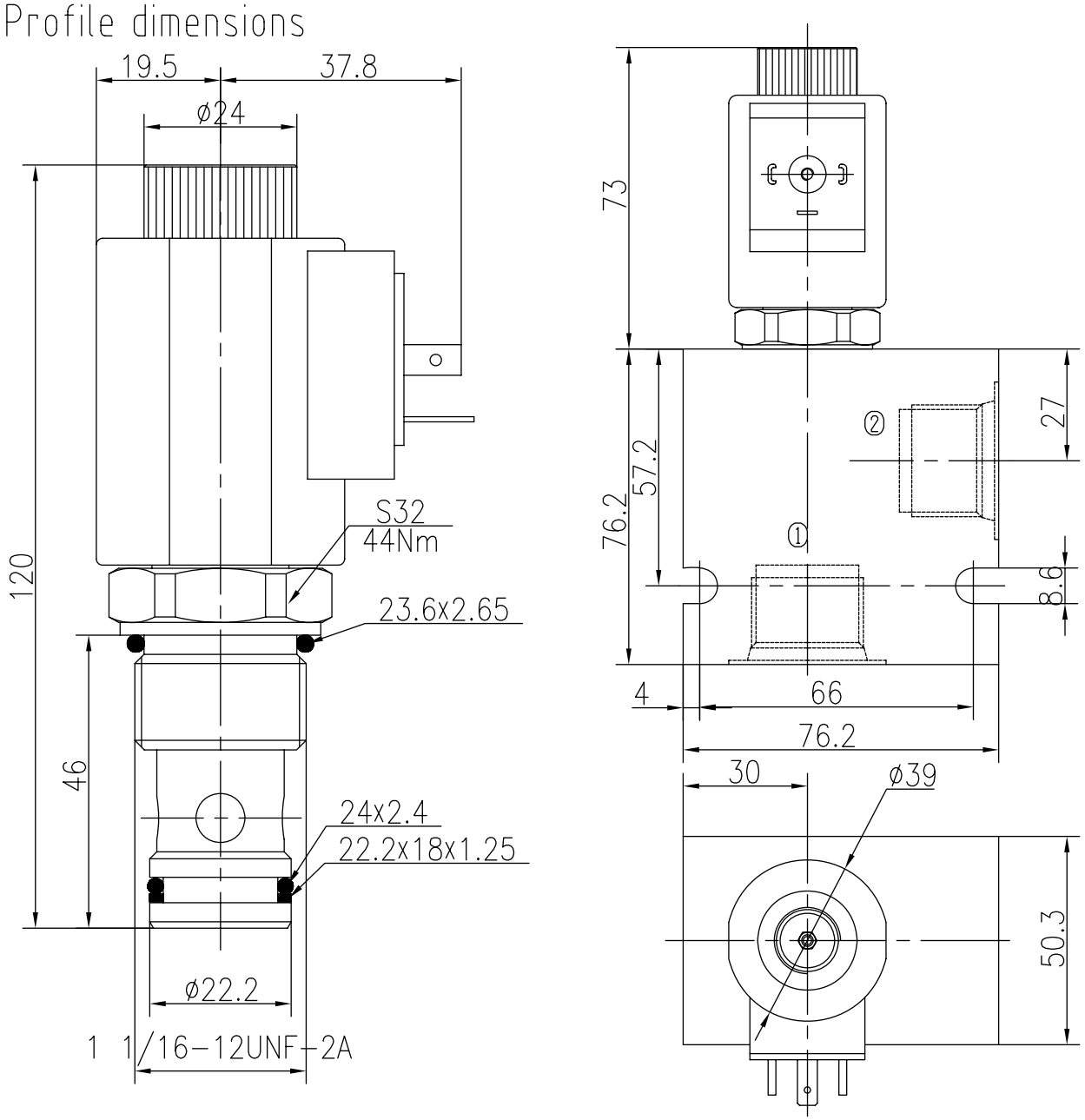

TO ORDER

BST12-221 - - - - -

Solenoid Valve Function

Body Porting
Omit for Cartridge only

G3/4 5G
G1 6G
SAE10 10T
SAE12 12T

Seals
Buna(Std.) N
Fluorocarbon V

Voltage
12 12VDC
24 24VDC
110 110VAC
220 220VAC

Connection
DL Double Leads
DH Electrial Outlet

Two Way Two Position(Poppet-type)

BST12-222 Normally Closed

Description of the process

When de-energized,the valve acts as a check valve,allowing flow from ① to ②, while blocking flow from ② to ①;
When energized,allowing flow from ② to ① and ① to ②.

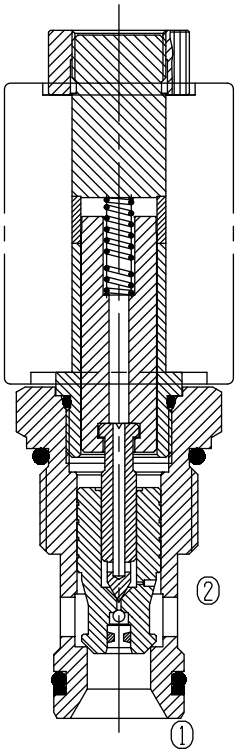

Specifications:

	250bar
Max. Working Pressure	See Performance
Flow Max.	0.3ml/min at 210bar
Internal Leakage	5drops/min
Operating Volt	12VDC、24VDC、110VAC、220VAC
Min Voltage Requires	85% of normal voltage
Filtration Of Oil	20μm or better
Type of Standard Cavity	T6-1
Temperature	-30~+100℃ Standard Buna Seals
Standard Block Model	T6-11*/13*/14*/16*

Symbol:

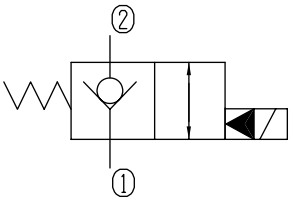

Characteristic:

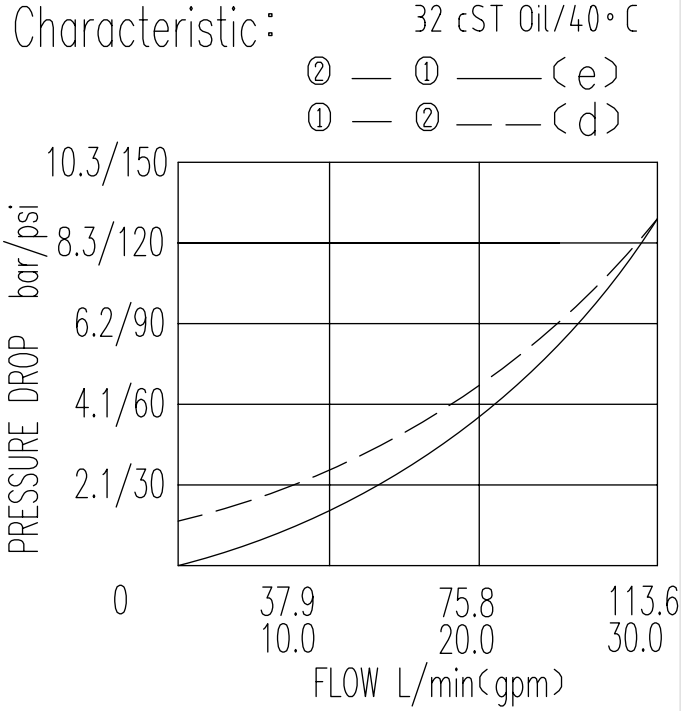

Two Way Two Position (Poppet-type)

BST12-222 Normally Closed

Profile dimensions

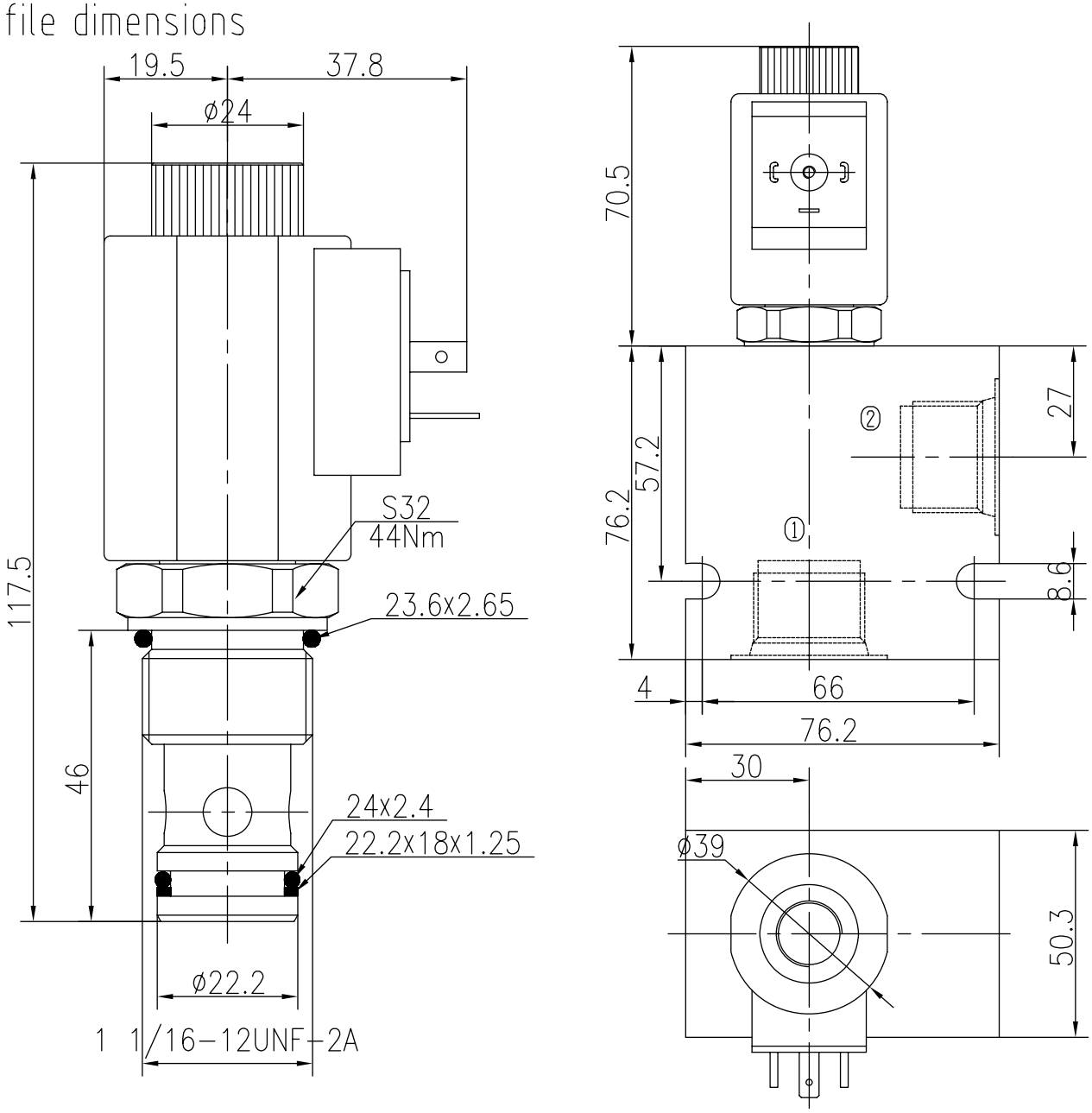

TO ORDER

BST12 -222 - - - -

Solenoid Valve Function

Body Porting
Omit for Cartridge only

G3/4 5G
G1 6G
SAE10 10T
SAE12 12T

Seals
Buna(Std.) N
Fluorocarbon V

Voltage
12 12VDC
24 24VDC
110 110VAC
220 220VAC

Connection
DL Double Leads
DH Electrial Outlet

Two Way Two Position(Poppet-type)

BST12-223 Normally Open

Description of the process

When energized,the valve acts as a check valve, allowing flow from ① to ②,while blocking flow from ② to ①;When de-energized,allowing flow from ② to ① and ① to ②.To override,push button and remain,the valve blocking flow from ② to ①;Release the button,then the valve allowing flow from ② to ① and ① to ②.

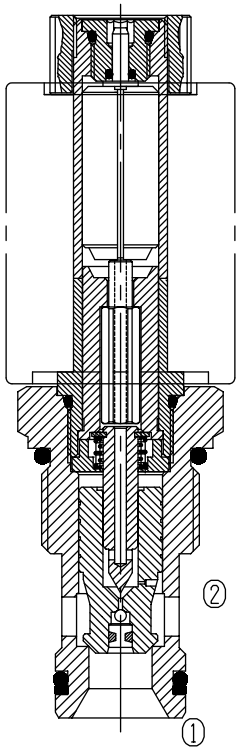

Specifications:

	250bar
Max. Working Pressure	See Performance
Flow Max.	0.3ml/min at 210bar
Internal Leakage	5drops/min
Operating Volt	12VDC、24VDC、110VAC、220VAC
Min Voltage Requires	85% of normal voltage
Filtration Of Oil	20μm or better
Type of Standard Cavity	T6-1
Temperature	-30~+100℃ Standard Buna Seals
Standard Block Model	T6-11*/13*/14*/16*

Symbol:

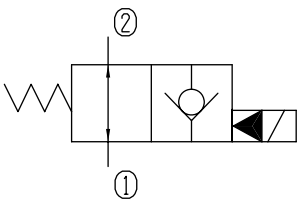

Characteristic:

32 cST Oil/40°C

② — ① ——— (d)

① — ② — — (e)

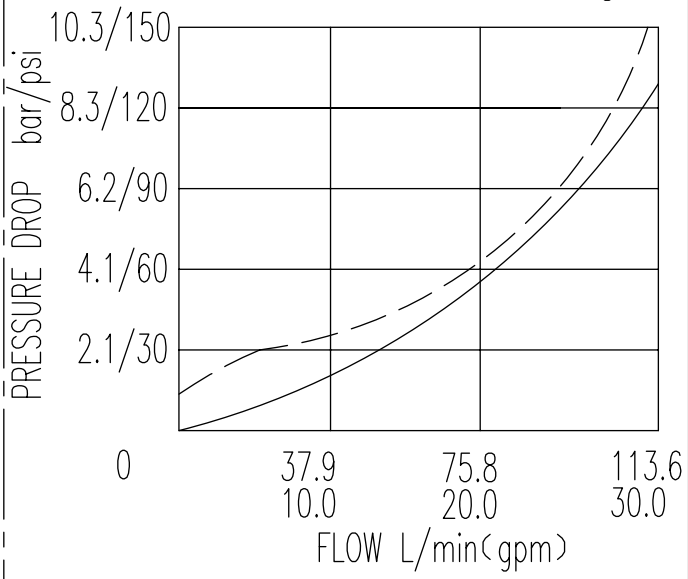

BST12-223 Normally Open

Profile dimensions

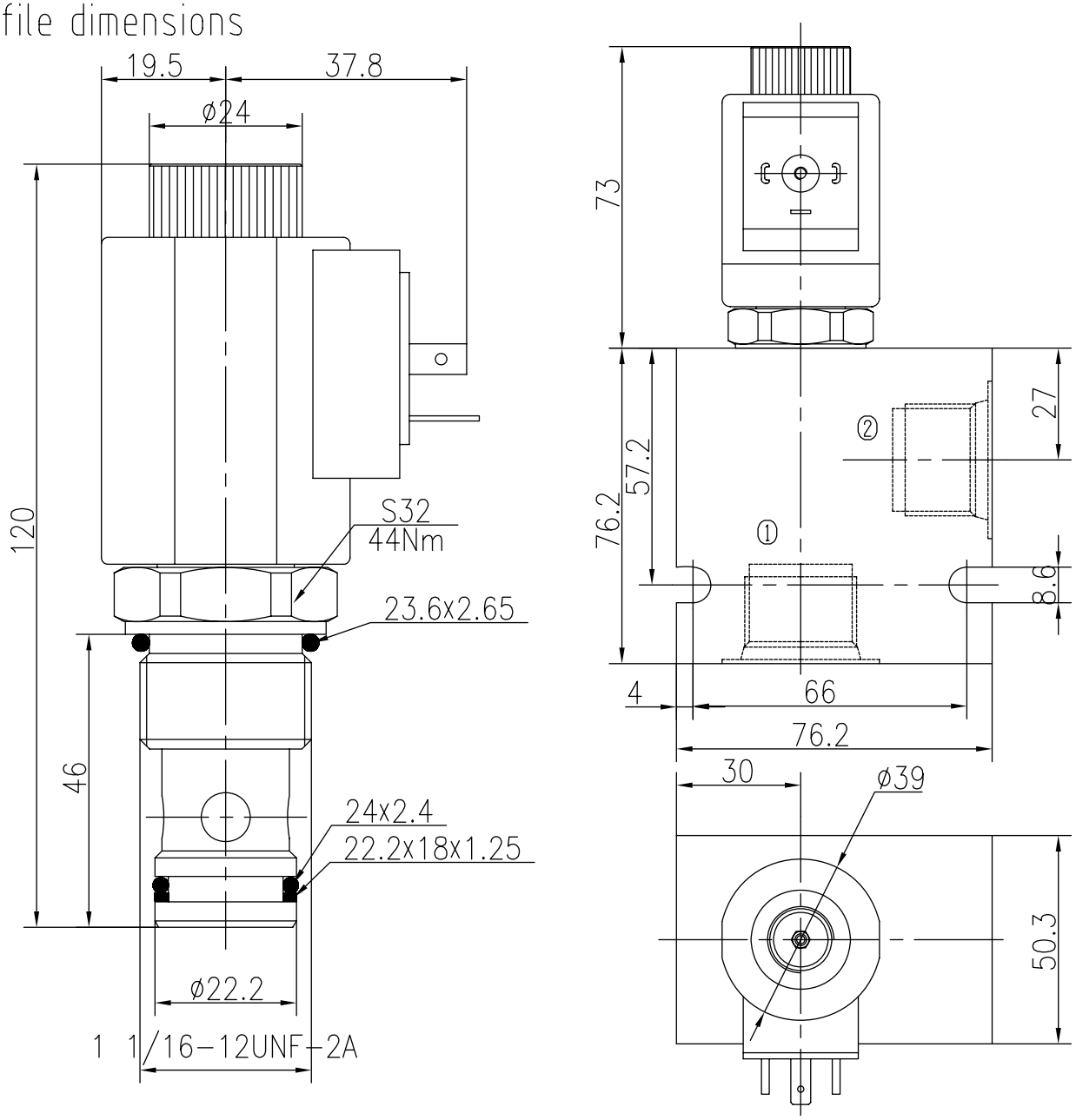

TO ORDER

BST12 - 223 - - - -

Solenoid Valve

Function

Body Porting

Omit for Cartridge only

G3/4 5G
G1 6G
SAE10 10T
SAE12 12T

Seals

Buna(Std.) N

Fluorocarbon V

Voltage

12 12VDC
24 24VDC
110 110VAC
220 220VAC

Connection

DL Double Leads
DH Electrial Outlet

Two Way Two Position(Poppet-type)

BST12S-229 Normally Closed

Description of the process

When de-energized,the valve blocks flow in both directionals,
When energized,allowing flow from ② to ① , while ① to ② remains closed.

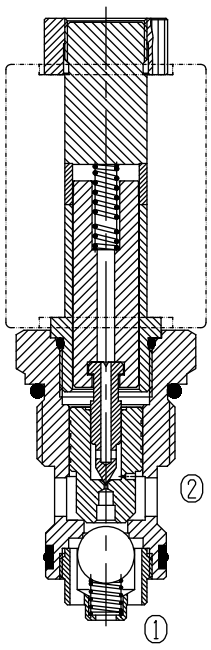

Specifications:

	250bar
Max. Working Pressure	See Performance
Flow Max.	0.3ml/min at 210bar
Internal Leakage	5drops/min
Operating Volt	12VDC、24VDC、110VAC、220VAC
Min Voltage Requires	85% of normal voltage
Filtration Of Oil	20μm or better
Type of Standard Cavity	T6-S1S
Temperature	-30~+100℃ Standard Buna Seals

Symbol:

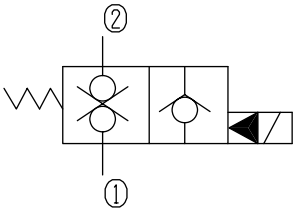

Characteristic: 32 cST Oil/40°C

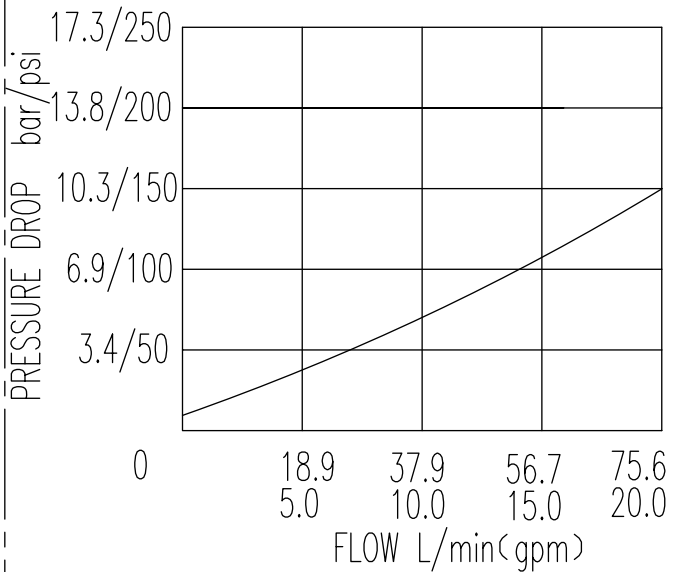

Two Way Two Position (Poppet-type)

BST12S-229 Normally Closed

Profile dimensions

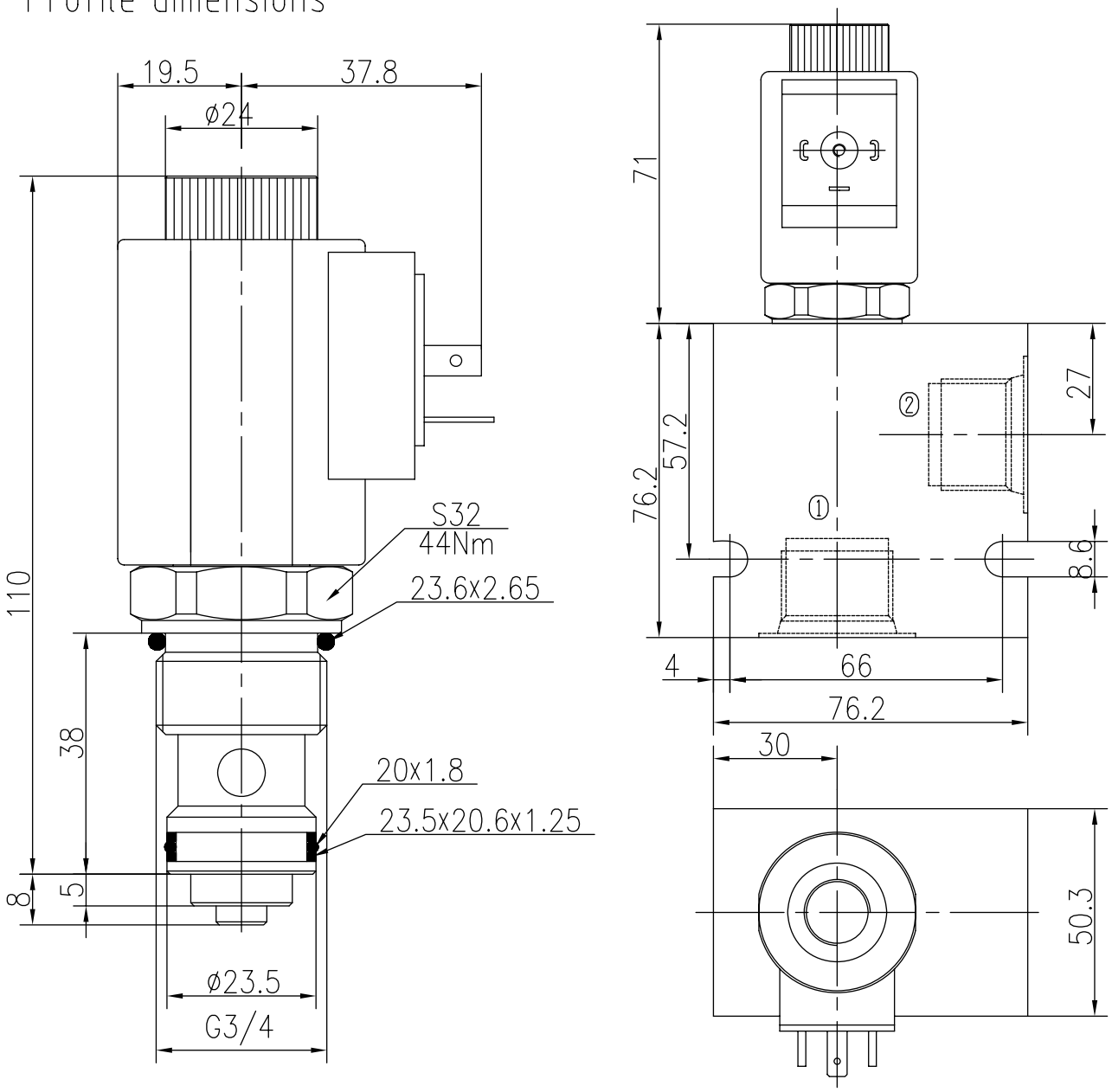

TO ORDER BST12S -229 - - - - -

Solenoid Valve Function

Body Porting
Omit for Cartridge only
- G3/4 5G
- G1 6G
- SAE10 10T
- SAE12 12T

Seals
- Buna(Std.) N
- Fluorocarbon V

Voltage
- 12 12VDC
- 24 24VDC
- 110 110VAC
- 220 220VAC

Connection
- DL Double Leads
- DH Electrial Outlet

Two Way Two Position(Poppet-type)

BST16-220 Normally Closed

Description of the process

When de-energized,the valve acts as a check valve,allowing flow from ① to ②,while blocking flow from ② to ①;When energized,allowing flow from ② to ①,While ① to ② is severely restricted.

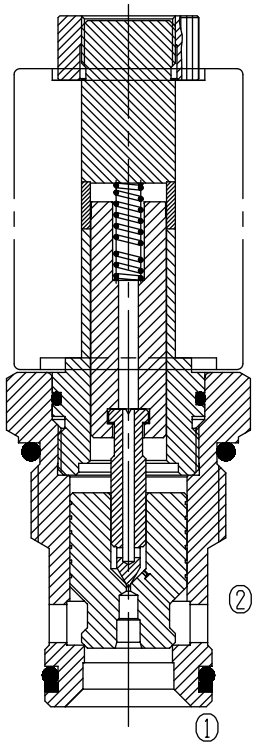

Specifications:

Max. Working Pressure	250bar
Flow Max.	See Performance
Internal Leakage	0.3ml/min at 210bar
Operating Volt	5drops/min
Min Voltage Requires	12VDC、24VDC、110VAC、220VAC
Filtration Of Oil	85% of normal voltage
Type of Standard Cavity	20μm or better
Temperature	T7-1
Standard Block Model	-30~+100℃ Standard Buna Seals
	T7-11*/13*/14*/16*

Symbol:

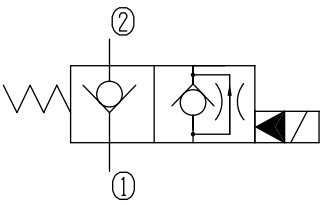

Characteristic:

32 cST Oil/40°C

② — ① ——(e)

① — ② — —(d)

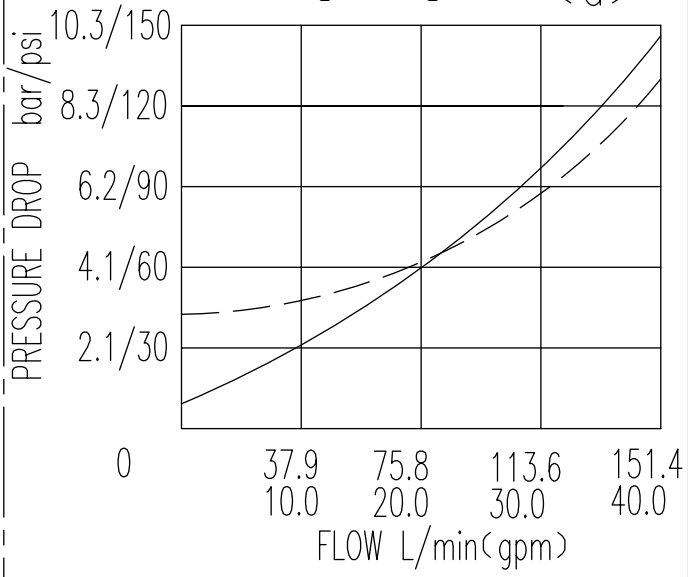

Two Way Two Position (Poppet-type)

BST16-220 Normally Closed

Profile dimensions

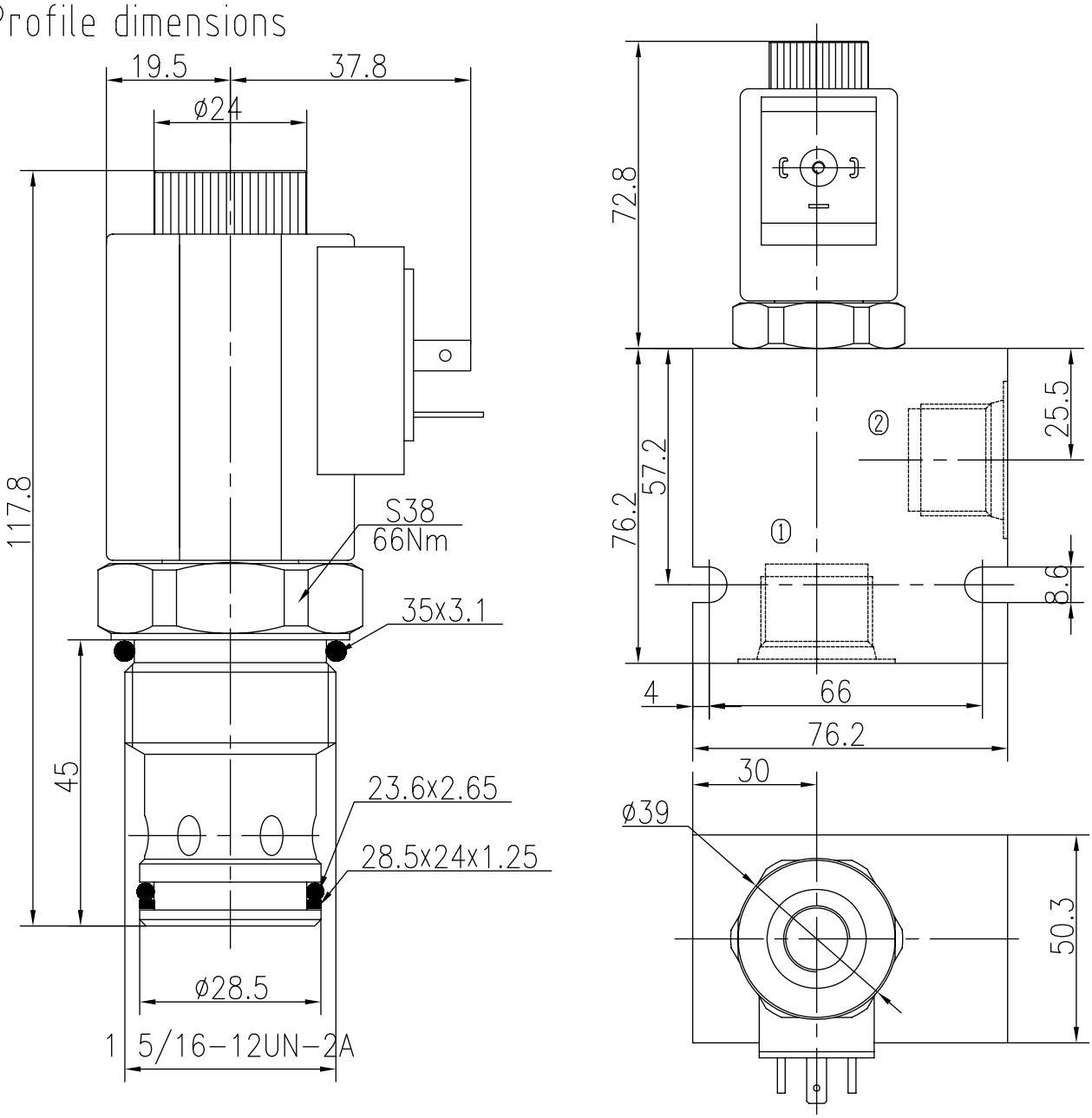

TO ORDER

BST16 -220 - - - - -

Solenoid Valve Function

Body Porting
Omit for Cartridge only

G3/4 5G
G1 6G
SAE10 10T
SAE12 12T

Seals
Buna(Std.) N
Fluorocarbon V

Voltage
12 12VDC
24 24VDC
110 110VAC
220 220VAC

Connection
DL Double Leads
DH Electrial Outlet

Two Way Two Position(Poppet-type)

BST16-221 Normally Open

Description of the process

When energized,the valve acts as a check valve, allowing flow from ① to ②,while blocking flow from ② to ①;When de-energized,allowing flow from ② to ①,While ① to ② is severely restricted. To override,push button and remain,the valve blocking flow from ② to ①;Release the button,then the valve allowing flow from ② to ①.

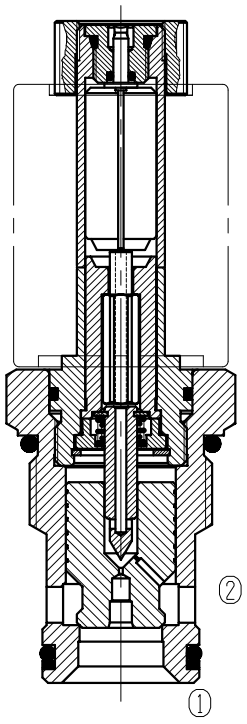

Specifications:

	250bar
Max. Working Pressure	See Performance
Flow Max.	0.3ml/min at 210bar
Internal Leakage	5drops/min
Operating Volt	12VDC、24VDC、110VAC、220VAC
Min Voltage Requires	85% of normal voltage
Filtration Of Oil	20μm or better
Type of Standard Cavity	T7-1
Temperature	-30~+100℃ Standard Buna Seals
Standard Block Model	T7-11*/13*/14*/16*

Symbol:

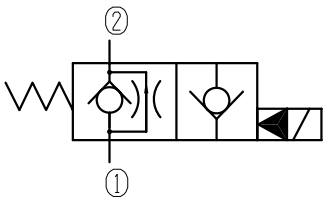

Characteristic:

32 cST Oil/40°C

② — ① ——— (d)

① — ② — — (e)

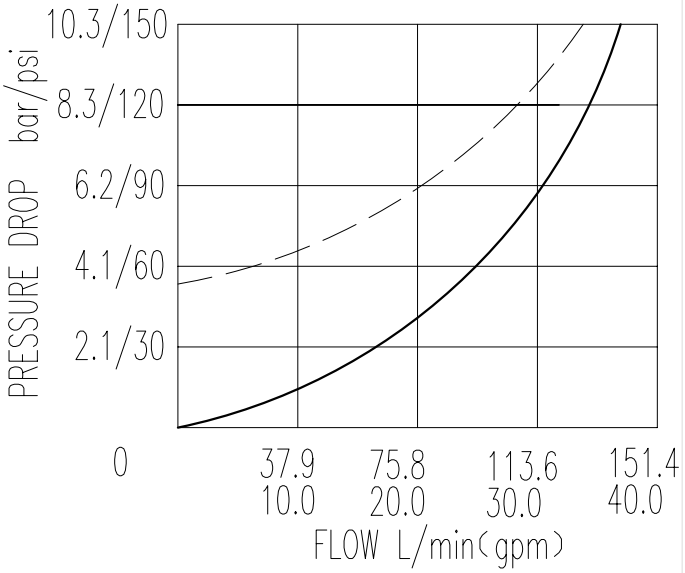

Two Way Two Position (Poppet-type)

BST16-221 Normally Open

Profile dimensions

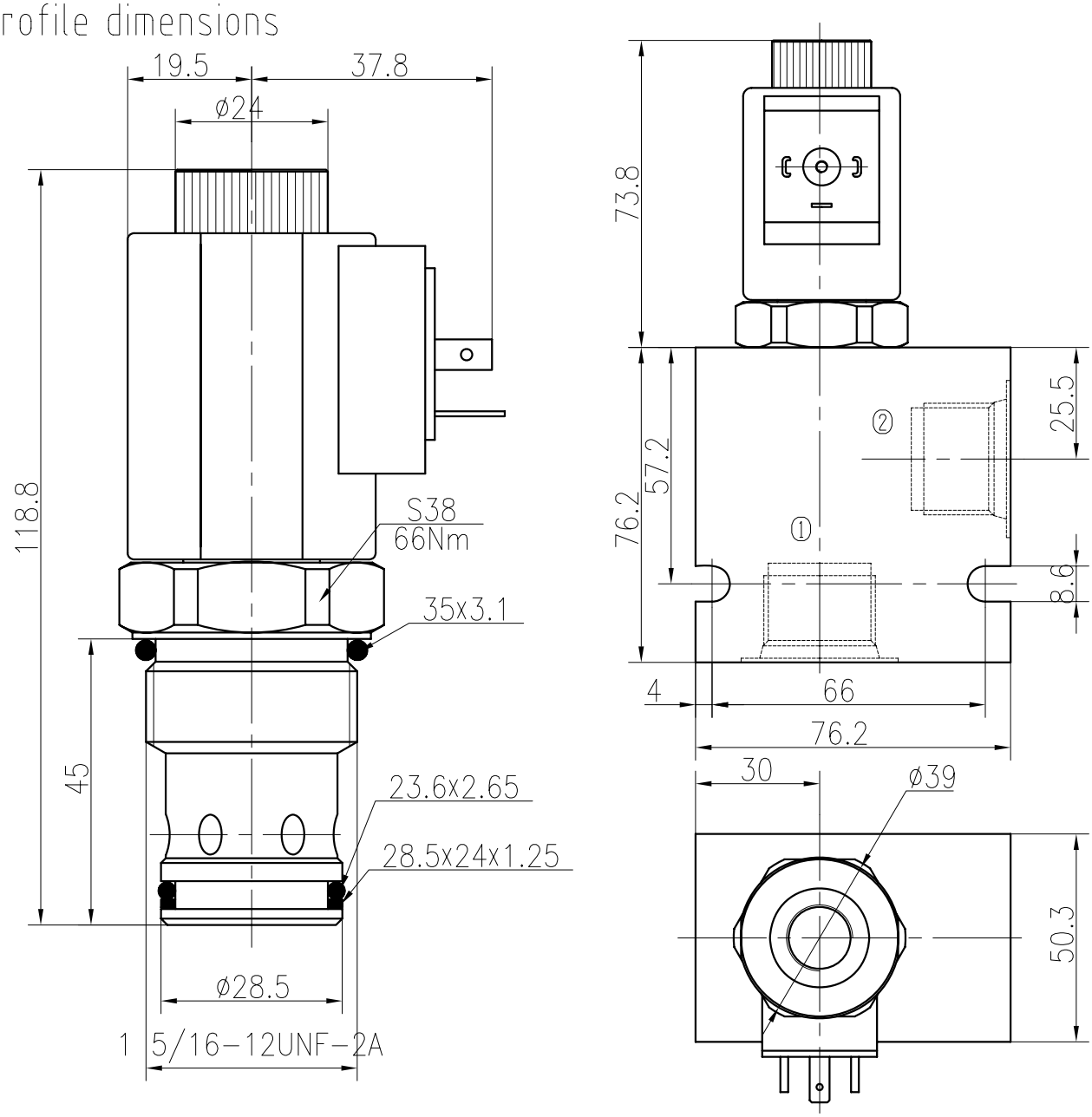

TO ORDER

BST16 - 221 - - - - -

Solenoid Valve
Function

Body Porting
Omit for Cartridge only

G3/4 5G
G1 6G
SAE10 10T
SAE12 12T

Seals
Buna(Std.) N
Fluorocarbon V

Voltage
12 12VDC
24 24VDC
110 110VAC
220 220VAC

Connection
DL Double Leads
DH Electrial Outlet

Two Way Two Position(Poppet-type)

BST16-222 Normally Closed

Description of the process

When de-energized,the valve acts as a check valve,allowing flow from ① to ②, while blocking flow from ② to ①;
When energized,allowing flow from ② to ① and ① to ②.

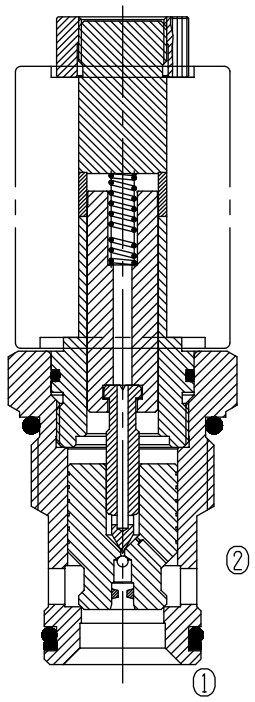

Specifications:

Max. Working Pressure	250bar
Flow Max.	See Performance
Internal Leakage	0.3ml/min at 210bar
Operating Volt	5drops/min
Min Voltage Requires	12VDC、24VDC、110VAC、220VAC
Filtration Of Oil	85% of normal voltage
Type of Standard Cavity	20μm or better
Temperature	T7-1
Standard Block Model	-30~+100℃ Standard Buna Seals
	T7-11*/13*/14*/16*

Symbol:

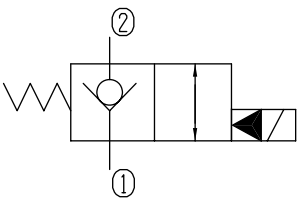

Characteristic:

32 cST Oil/40°C

② — ① ——(e)
① — ② — —(d)

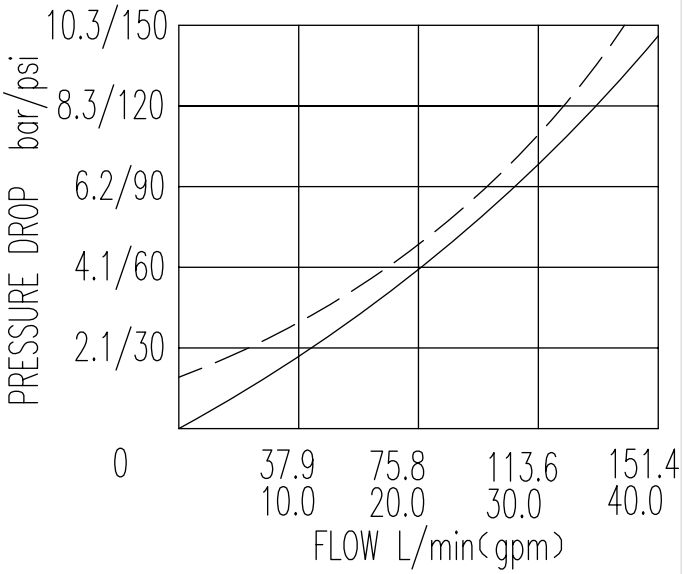

Two Way Two Position (Poppet-type)

BST16-222 Normally Closed

Profile dimensions

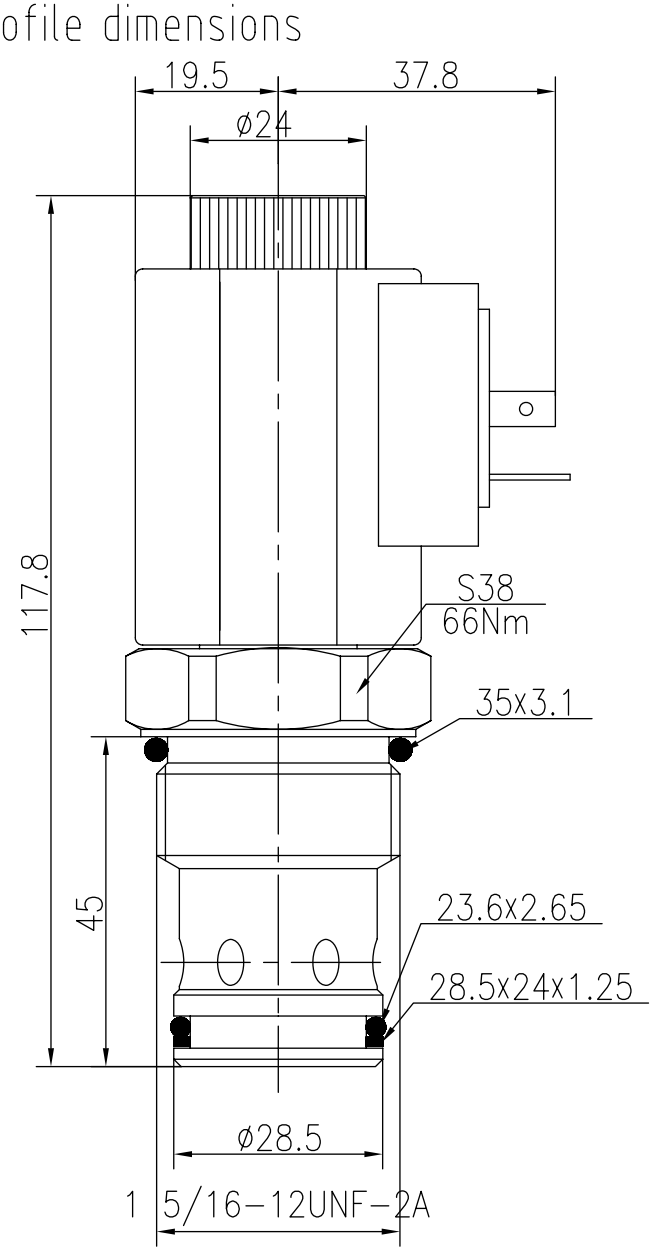

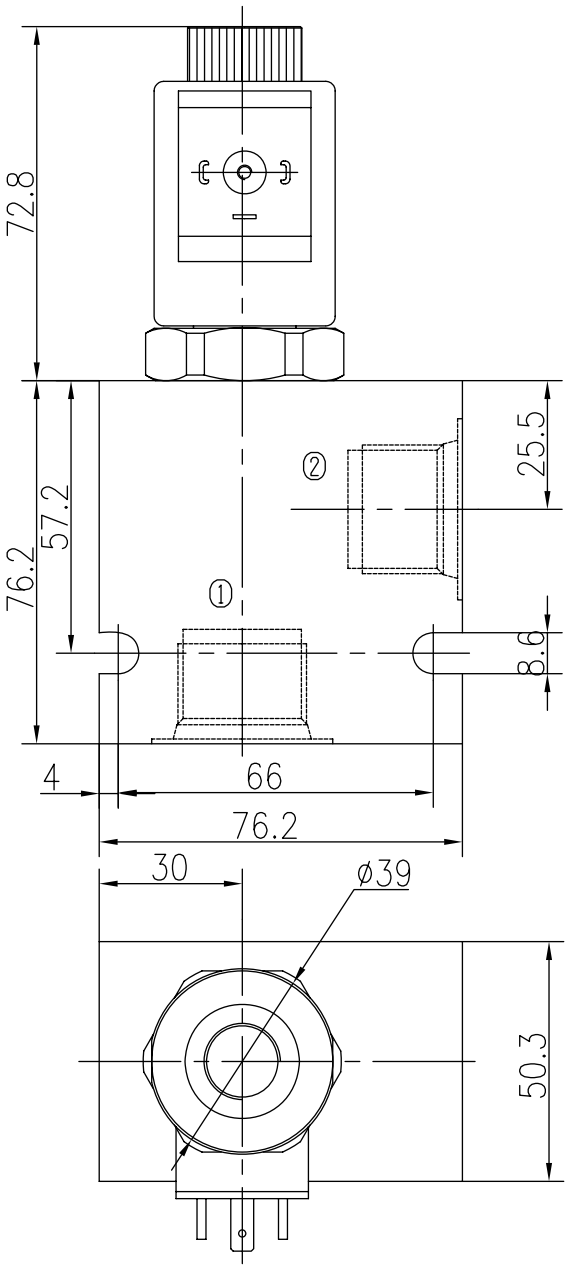

TO ORDER

BST16 -222 - - - - -

Solenoid Valve
Function

Body Porting
Omit for Cartridge only

G3/4 5G
G1 6G
SAE10 10T
SAE12 12T

Seals
Buna(Std.) N
Fluorocarbon V

Voltage
12 12VDC
24 24VDC
110 110VAC
220 220VAC

Connection
DL Double Leads
DH Electrial Outlet

Two Way Two Position(Poppet-type)

BST16-223 Normally Open

Description of the process

When energized,the valve acts as a check valve, allowing flow from ① to ②,while blocking flow from ② to ①;When de-energized,allowing flow from ② to ① and ① to ②.
To override,push button and remain,the valve blocking flow from ② to ①;Release the button,then the valve allowing flow from ② to ① and ① to ②.

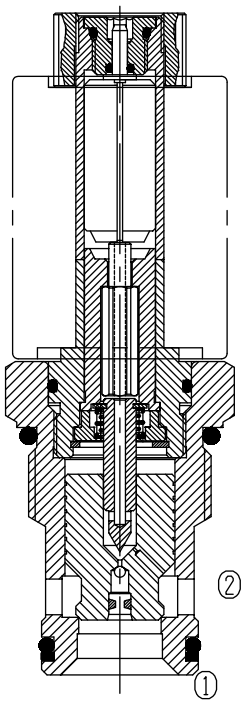

Specifications:

Max. Working Pressure	250bar
Flow Max.	See Performance
Internal Leakage	0.3ml/min at 210bar
Operating Volt	5drops/min
Min Voltage Requires	12VDC、24VDC、110VAC、220VAC
Filtration Of Oil	85% of normal voltage
Type of Standard Cavity	20μm or better
Temperature	T7-1
Standard Block Model	-30~+100℃ Standard Buna Seals
	T7-11*/13*/14*/16*

Symbol:

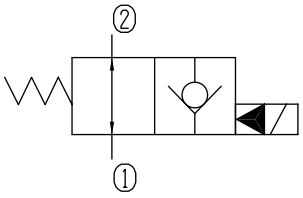

Characteristic:

32 cST Oil/40°C

② — ① ——(d)
① — ② — —(e)

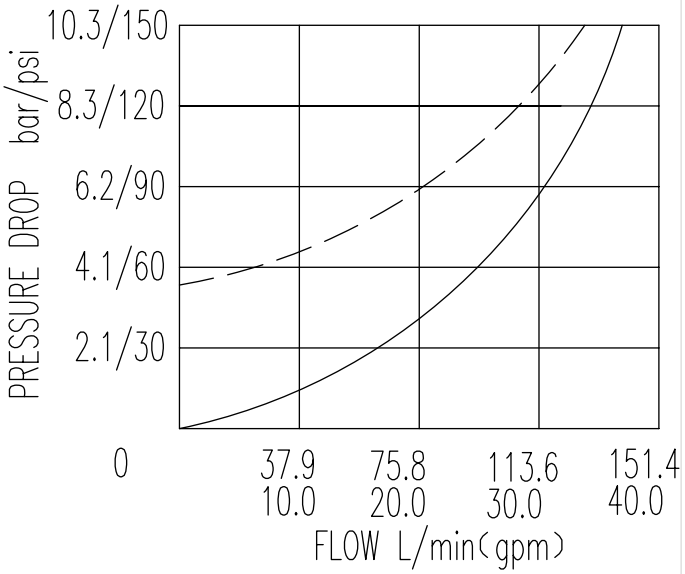

Two Way Two Position (Poppet-type)

BST16-223 Normally Open

Profile dimensions

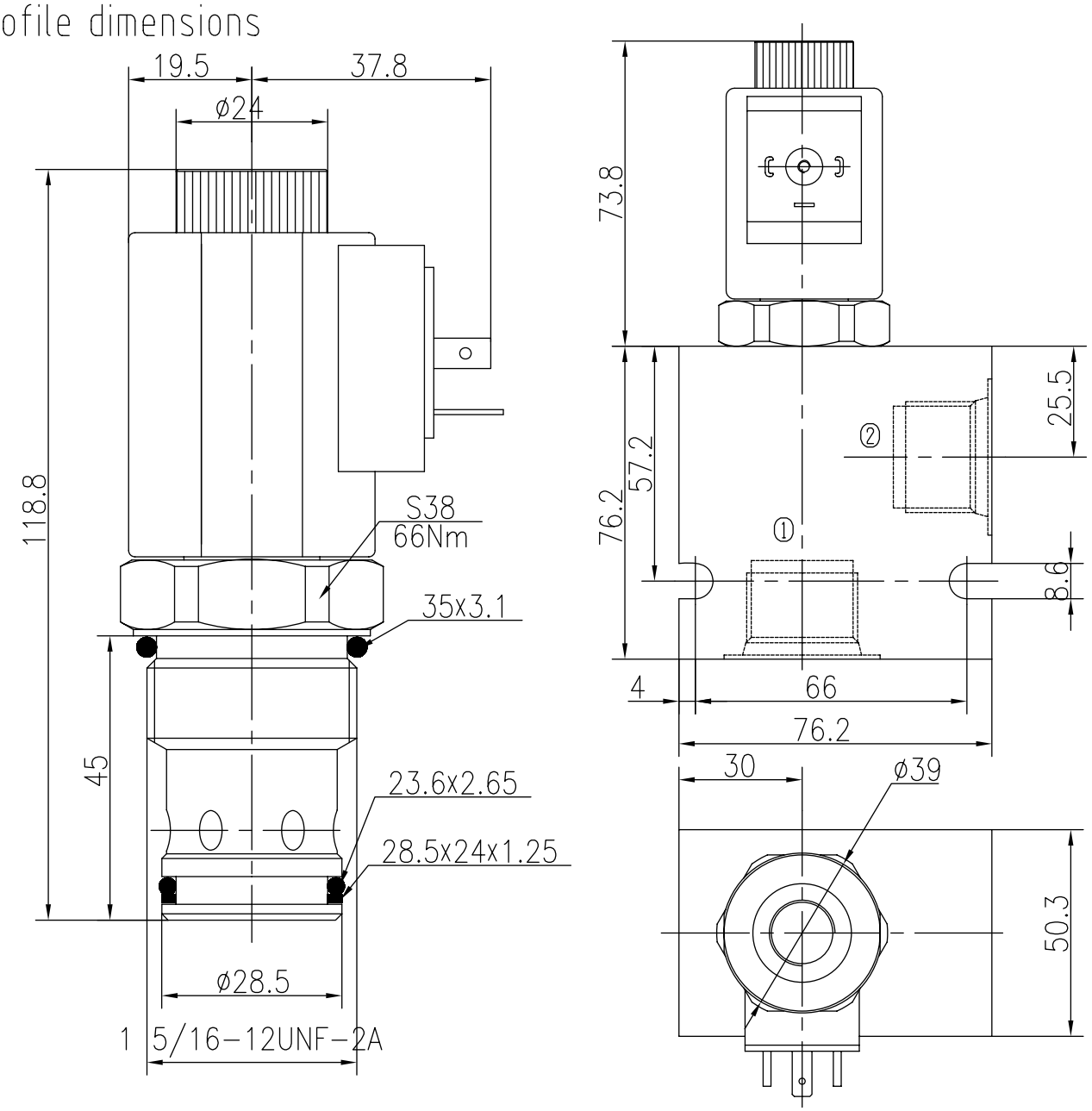

TO ORDER

BST16 -223 - - - - -

- Solenoid Valve Function
- Body Porting (Omit for Cartridge only)
  - G3/4 5G
  - G1 6G
  - SAE10 10T
  - SAE12 12T
- Seals
  - Buna(Std.) N
  - Fluorocarbon V
- Voltage
  - 12 12VDC
  - 24 24VDC
  - 110 110VAC
  - 220 220VAC
- Connection
  - DL Double Leads
  - DH Electrial Outlet

Two Way Two Position(Poppet-type)

BST16S-229 Normally Closed

Description of the process

When de-energized,the valve blocks flow in both directionals,
When energized,allowing flow from ② to ① , while ① to ② remains closed.

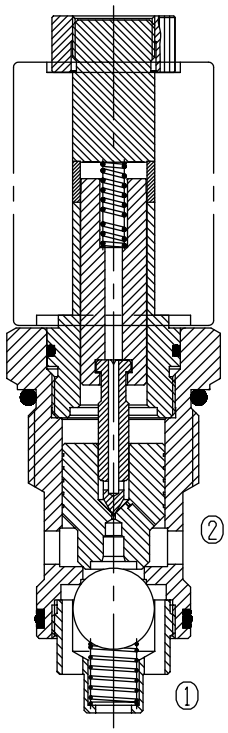

Specifications:

	250bar
Max. Working Pressure	See Performance
Flow Max.	0.3ml/min at 210bar
Internal Leakage	5drops/min
Operating Volt	12VDC、24VDC、110VAC、220VAC
Min Voltage Requires	85% of normal voltage
Filtration Of Oil	20μm or better
Type of Standard Cavity	T7-S1S
Temperature	-30~+100℃ Standard Buna Seals

Symbol:

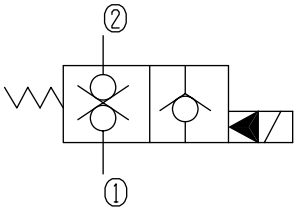

Characteristic:

32 cST Oil/40°C

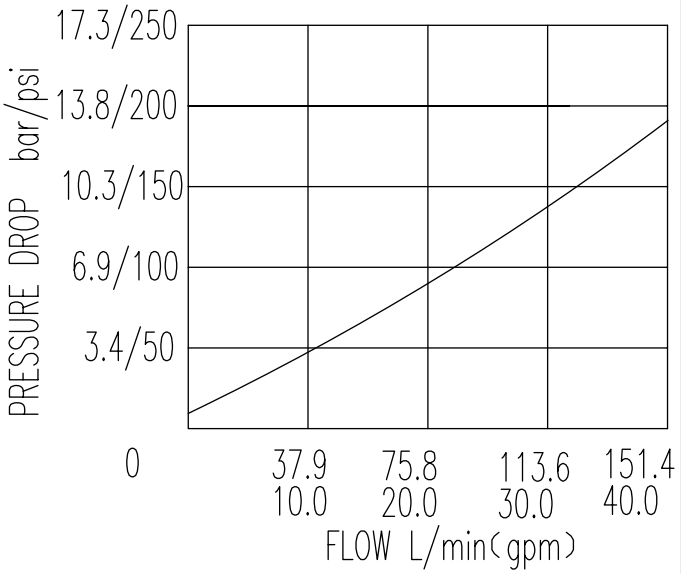

Two Way Two Position (Poppet-type)

BST16S-229 Normally Closed

Profile dimensions

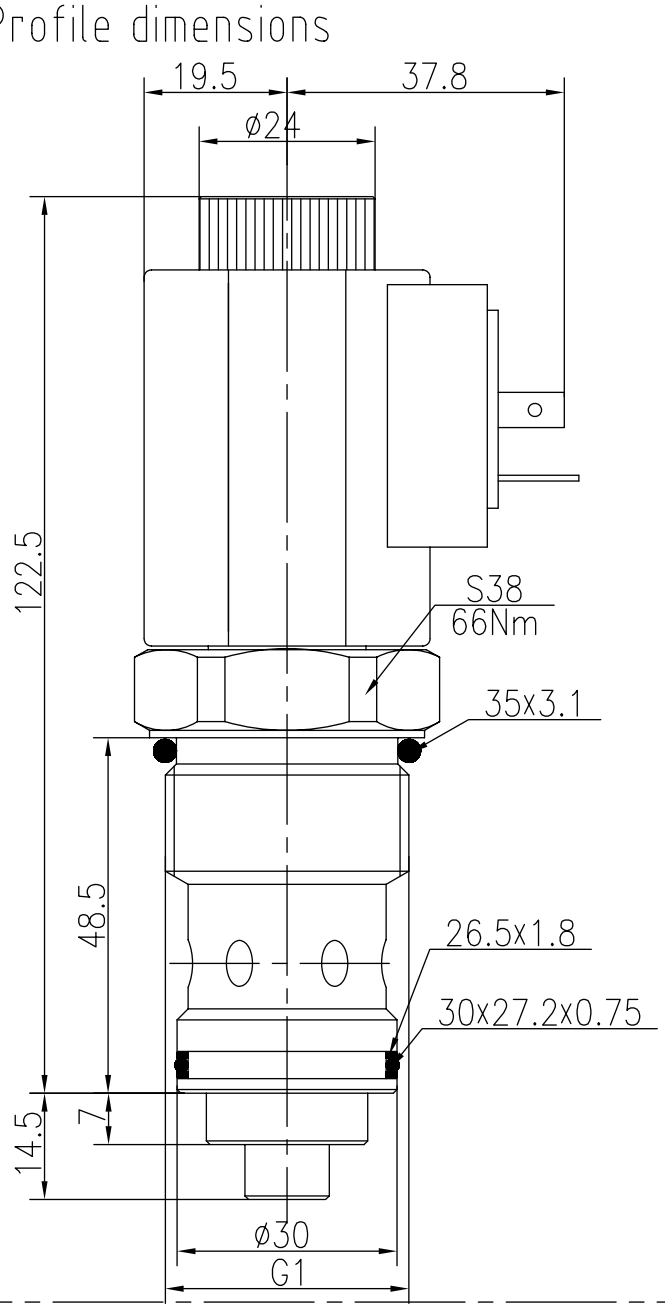

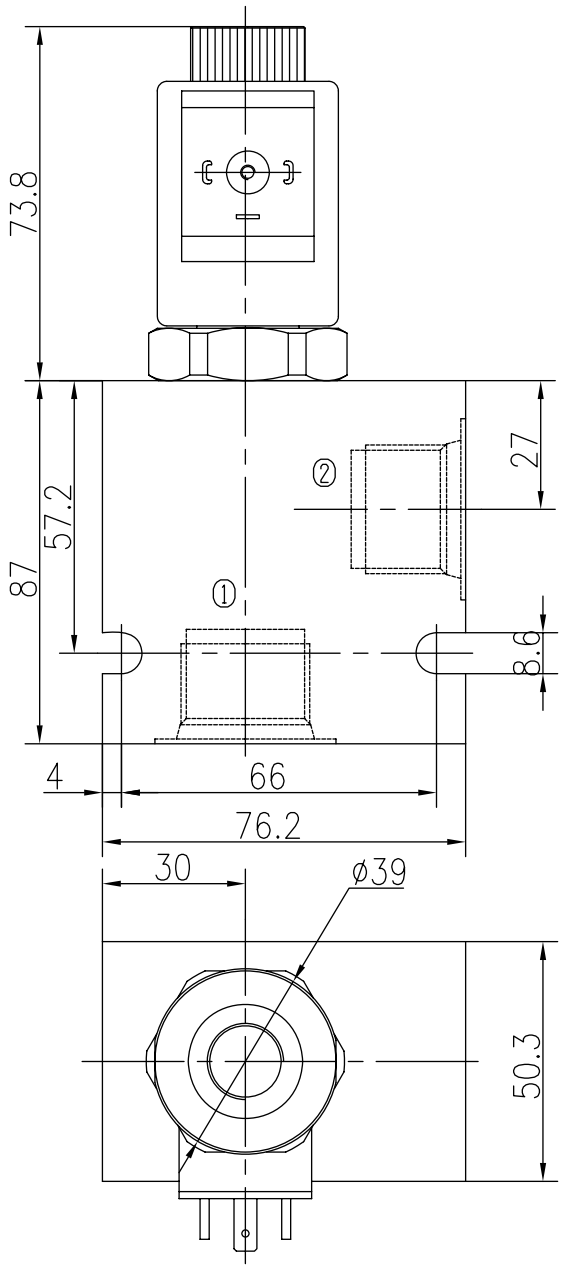

TO ORDER

BST16S -229 - - - - -

Solenoid Valve Function

Body Porting
Omit for Cartridge only

G3/4 5G
G1 6G
SAE10 10T
SAE12 12T

Seals
Buna(Std.) N
Fluorocarbon V

Voltage
12 12VDC
24 24VDC
110 110VAC
220 220VAC

Connection
DL Double Leads
DH Electrial Outlet

Three Way Two Position(Spool-type)

BST08S-230

Description of the process

When de-energized,the valve allows flow from ② to ③,while blocking flow at ①;

When energized,the valve allows flow from ① to ②,while blocking flow at ③.

P--- (PRESSURE PORT)
A--- (WORKING PORT)
T---(TANK PORT)

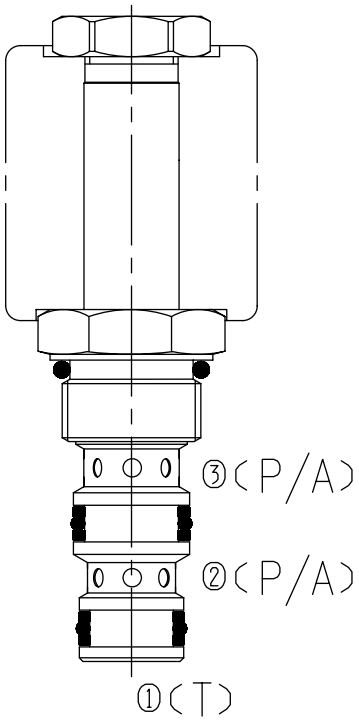

Specifications:

	210bar
Max. Working Pressure	See Performance
Flow Max.	<80ml/min at 210bar
Operating Volt	12VDC、24VDC、110VAC、220VAC
Min Voltage Requires	85% of normal voltage
Filtration Of Oil	20μm or better
Type of Standard Cavity	T4-2
Temperature	-30~+100℃ Standard Buna Seals
Standard Block Model	T4-21*/23*/24*/26*

Symbol:

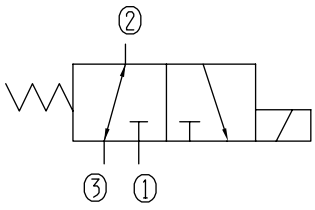

Characteristic:

32 cST Oil/40°C

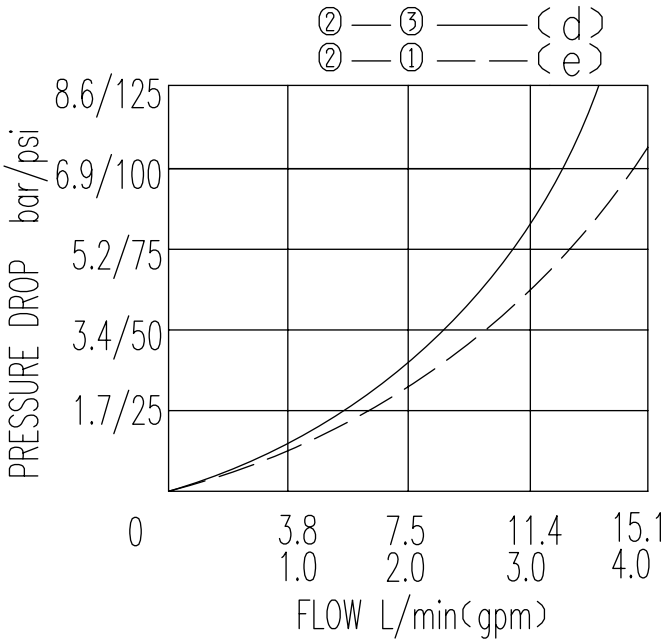

Three Way Two Position (Spool-type)

BST08S-230 Profile dimensions

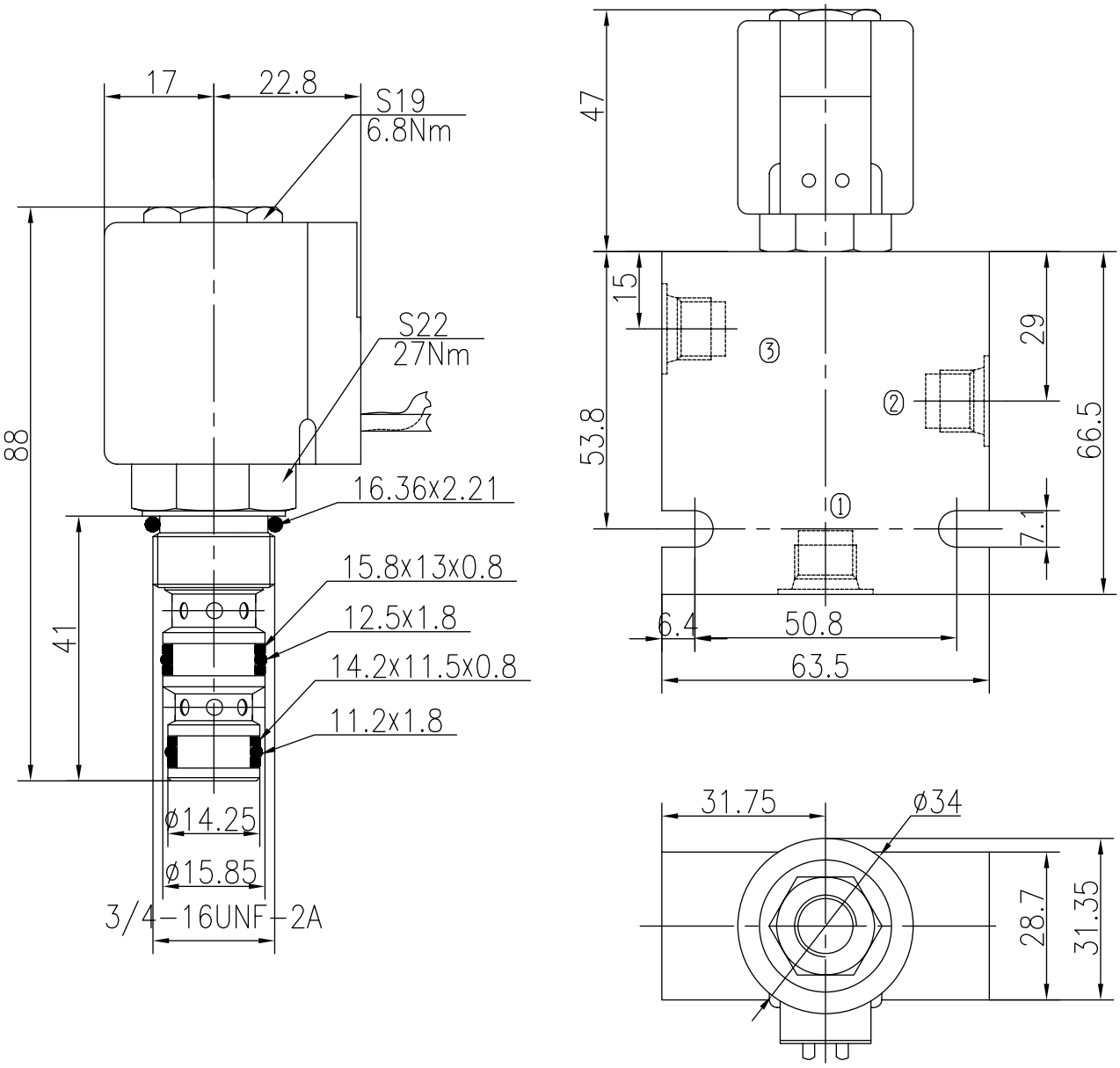

TO ORDER BST08S-230 - _ _ - _ - _ _ _ - _ _

Solenoid Valve

Function

Body Porting

Omit for Cartridge only

G1/4 4G
G3/8 8G
SAE4 4T
SAE6 6T

Seals

Buna(Std.) N

Fluorocarbon V

Voltage

12 12VDC
24 24VDC
110 110VAC
220 220VAC

Connection

DL Double Leads
DH Electrial Outlet

Three Way Two Position(Spool-type)

BST08S-231

Description of the process

When de-energized,the valve allows flow from ① to ②,while blocking flow at ③;

When energized,the valve allows flow from ① to ③,while blocking flow at ②.

P--- (PRESSURE PORT)
A--- (WORKING PORT)
T---(TANK PORT)

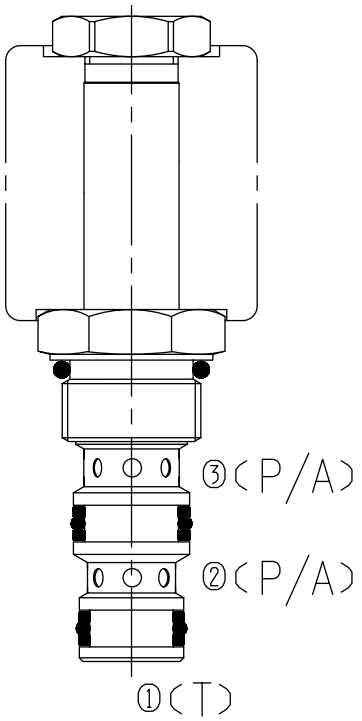

Specifications:

	210bar
Max. Working Pressure	See Performance
Flow Max.	<80ml/min at 210bar
Operating Volt	12VDC、24VDC、110VAC、220VAC
Min Voltage Requires	85% of normal voltage
Filtration Of Oil	20μm or better
Type of Standard Cavity	T4-2
Temperature	-30~+100℃ Standard Buna Seals
Standard Block Model	T4-21*/23*/24*/26*

Symbol:

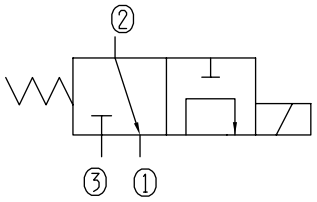

Characteristic:

32 cST Oil/40°C

② —① ——(d)
③ —① — —(e)

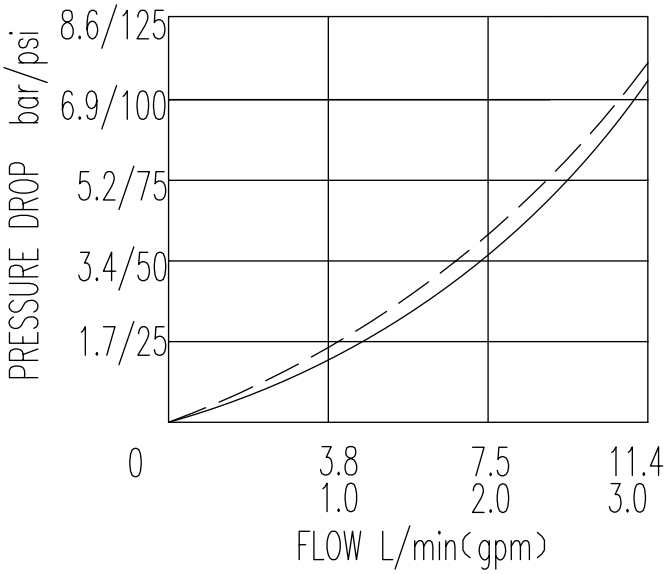

Three Way Two Position (Spool-type)

BST08S-231 Profile dimensions

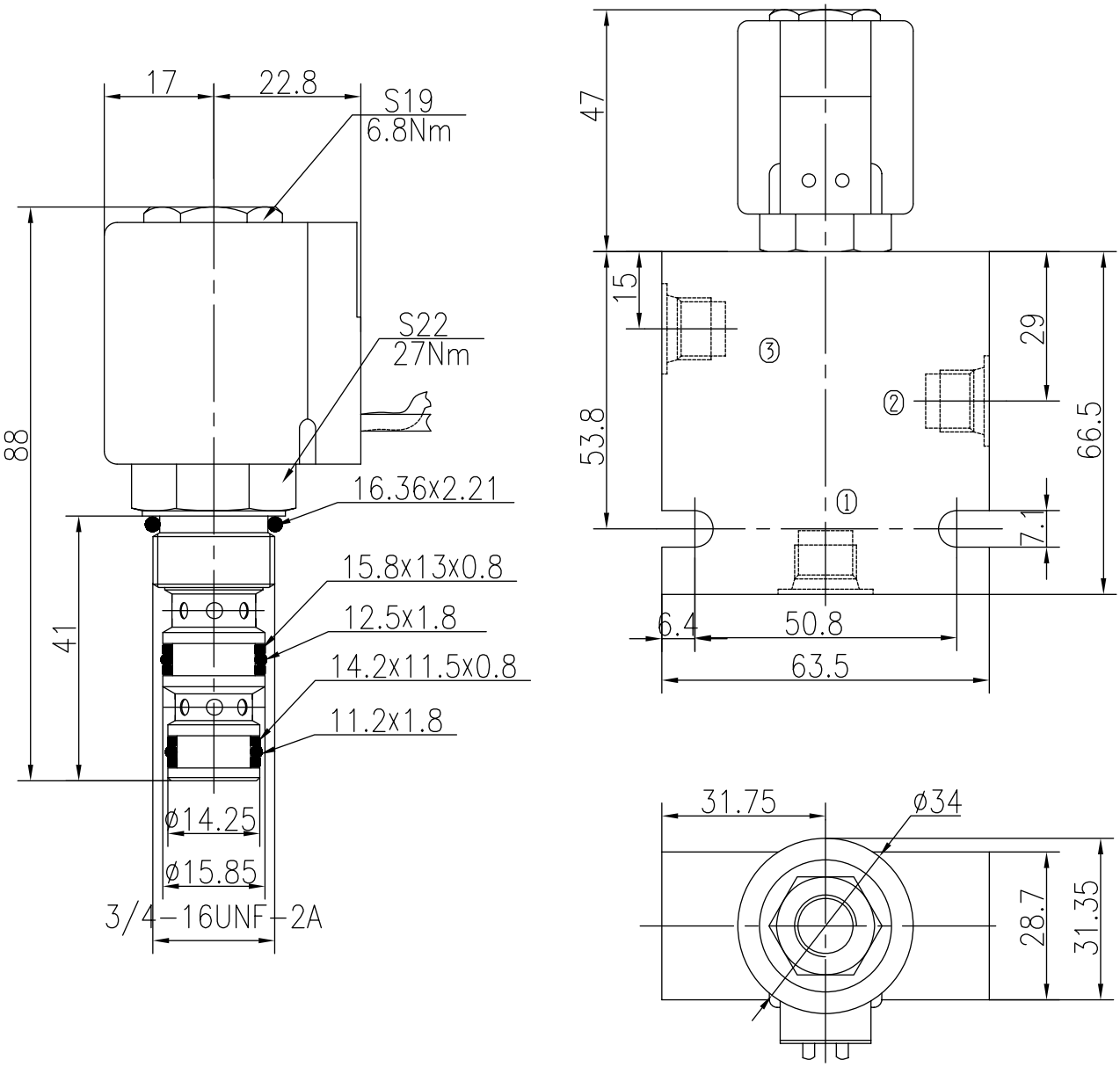

TO ORDER BST08S -231 - _ _ - _ - _ _ _ - _ _

Solenoid Valve

Function

Body Porting

Omit for Cartridge only

G1/4 4G
G3/8 8G
SAE4 4T
SAE6 6T

Seals

Buna(Std.) N

Fluorocarbon V

Voltage

12 12VDC
24 24VDC
110 110VAC
220 220VAC

Connection

DL Double Leads

DH Electrial Outlet

Three Way Two Position(Spool-type)

BST08-232

Description of the process

When de-energized,the valve allows flow from ① to ②,while blocking flow at ③;

When energized,the valve allows flow from ② to ③,while blocking flow at ①.

P-----(PRESSURE PORT)
A-----(WORKING PORT)
T-----(TANK PORT)

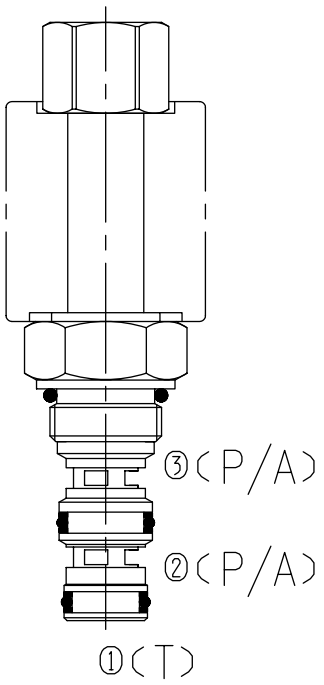

Specifications:

Max. Working Pressure	50bar
Flow Max.	See Performance
Operating Volt	<80ml/min at 210bar
Min Voltage Requires	12VDC、24VDC、110VAC、220VAC
Filtration Of Oil	85% of normal voltage
Type of Standard Cavity	20μm or better
Temperature	T4-2
Standard Block Model	-30~+100℃ Standard Buna Seals
	T4-21*/23*/24*/26*

Symbol:

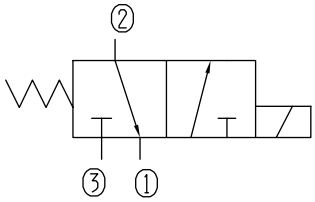

Characteristic:

32 cST Oil/40°C

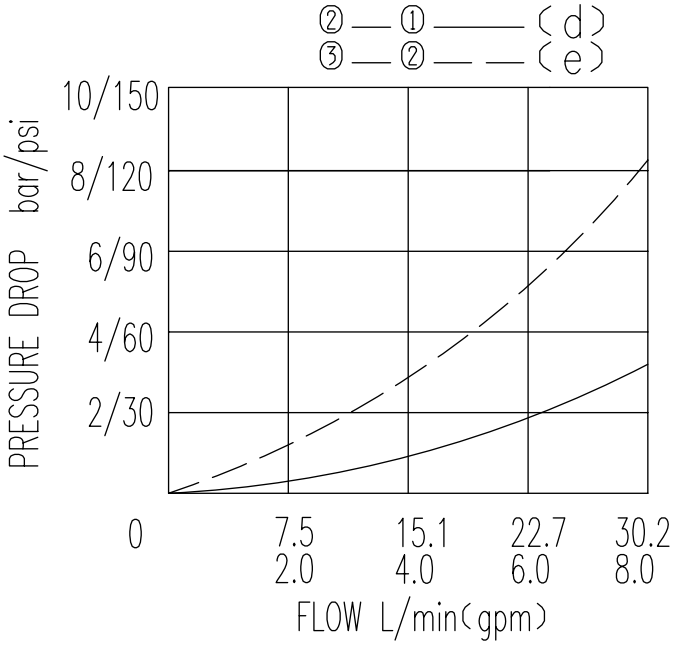

BST08-232 Profile dimensions

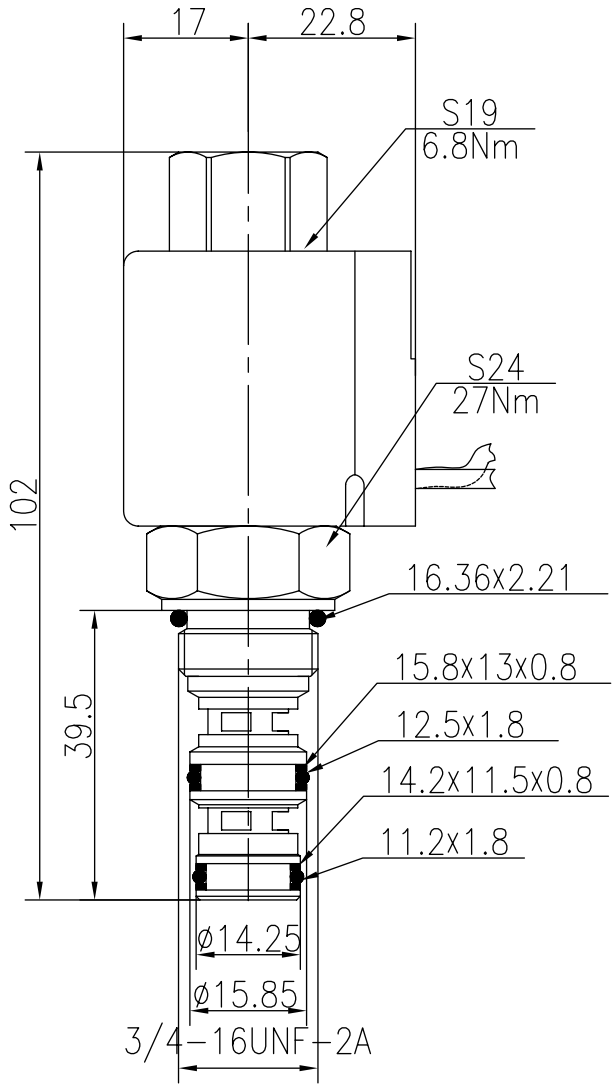

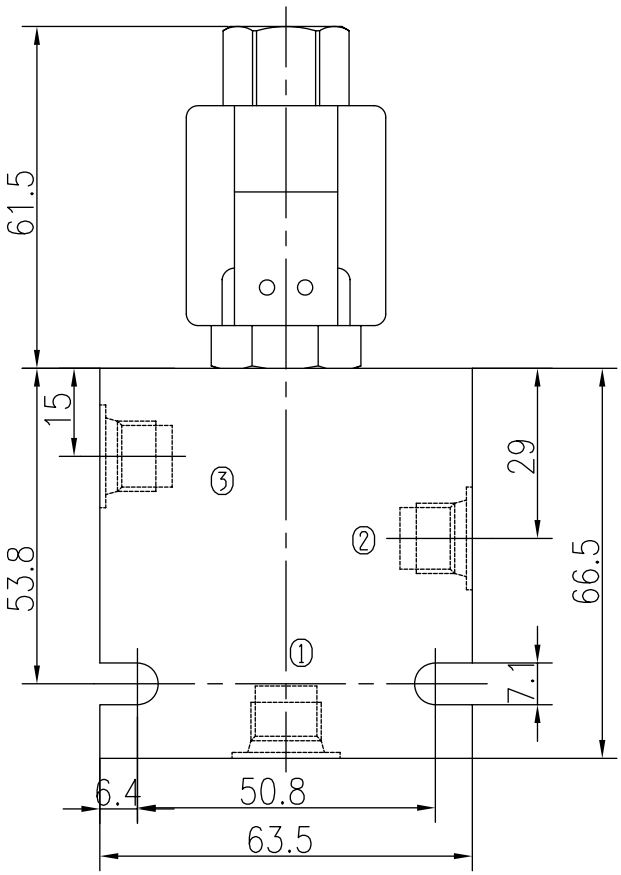

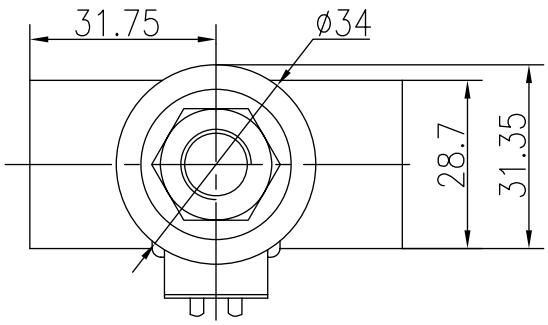

TO ORDER BST08 - 232 - ___ - ___ - ___ - ___

Solenoid Valve Function

Body Porting
Omit for Cartridge only

G1/4 4G
G3/8 8G
SAE4 4T
SAE6 6T

Seals
Buna(Std.) N
Fluorocarbon V

Voltage
12 12VDC
24 24VDC
110 110VAC
220 220VAC

Connection
DL Double Leads
DH Electrial Outlet

Three Way Two Position (Spool-type)

BST08S-232

Description of the process

When de-energized,the valve allows flow from ① to ②,while blocking flow at ③;

When energized,the valve allows flow from ② to ③,while blocking flow at ①.

P----- (PRESSURE PORT)
A----- (WORKING PORT)
T----- (TANK PORT)

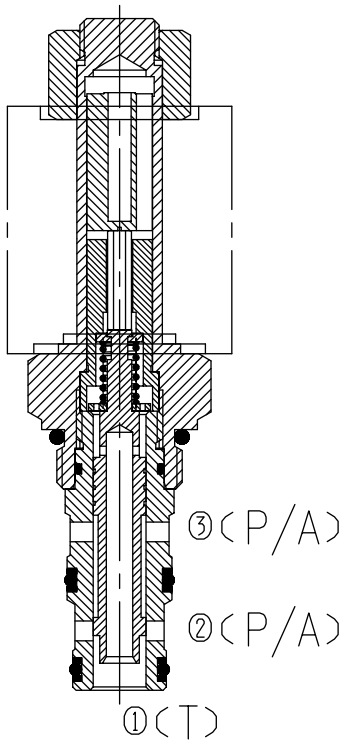

Specifications:

210bar	
Max. Working Pressure	See Performance
Flow Max.	<80ml/min at 210bar
Operating Volt	12VDC、24VDC、110VAC、220VAC
Min Voltage Requires	85% of normal voltage
Filtration Of Oil	20μm or better
Type of Standard Cavity	T4-2
Temperature	-30~+100℃ Standard Buna Seals
Standard Block Model	T4-21*/23*/24*/26*

Symbol:

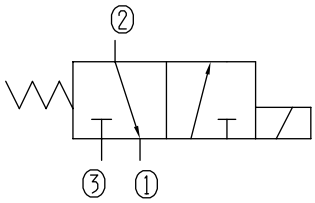

Characteristic:

32 cST Oil/40°C

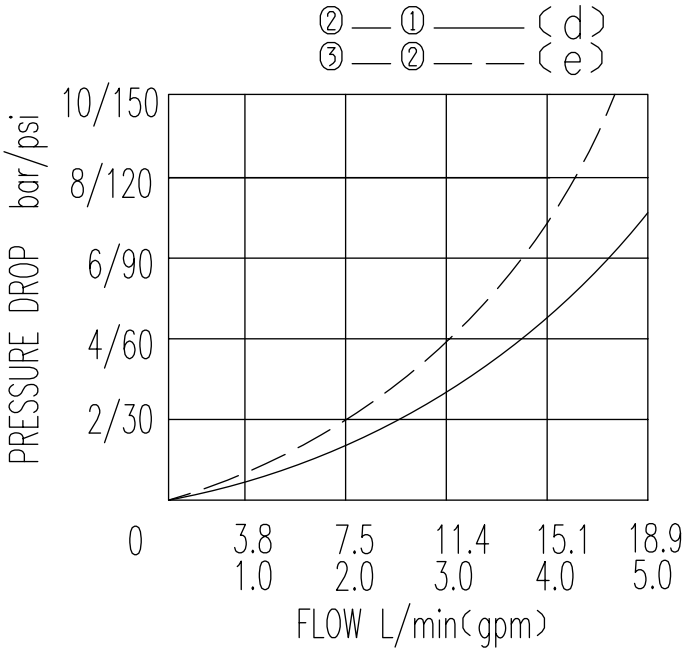

Three Way Two Position (Spool-type)

BST08S-232 Profile dimensions

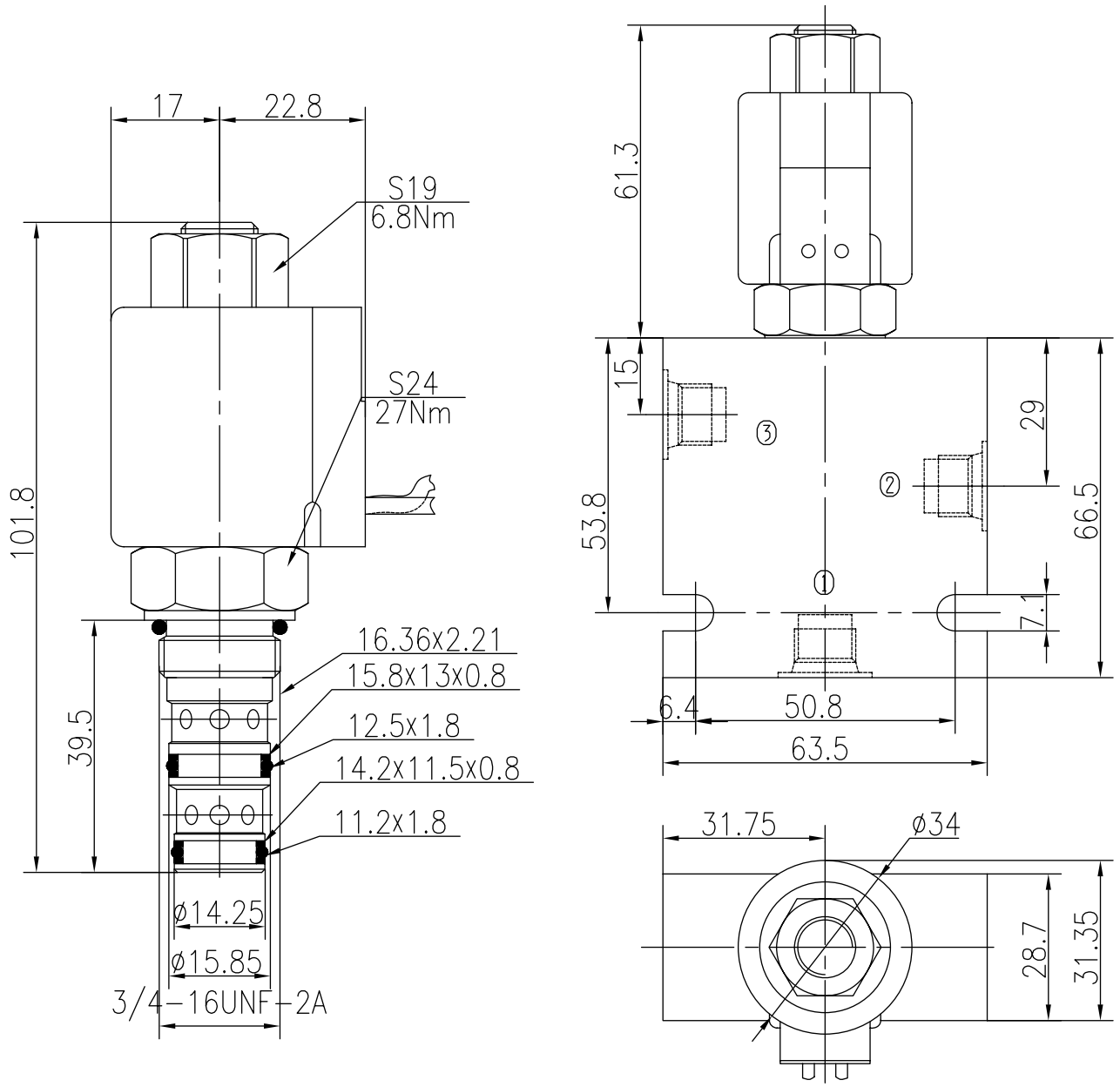

TO ORDER BST08S -232 - _ _ - _ - _ _ _ - _ _

Solenoid Valve

Function

Body Porting

Omit for Cartridge only

G1/4 4G
G3/8 8G
SAE4 4T
SAE6 6T

Seals

Buna(Std.) N

Fluorocarbon V

Voltage

12 12VDC
24 24VDC
110 110VAC
220 220VAC

Connection

DL Double Leads

DH Electrial Outlet

Three Way Two Position(Spool-type)

BST08S-233

Description of the process

When de-energized,the valve blocks all ports;
When energized,the valve allows flow from ③ to ② and to ①.

P-----(PRESSURE PORT)
A-----(WORKING PORT)
T-----(TANK PORT)

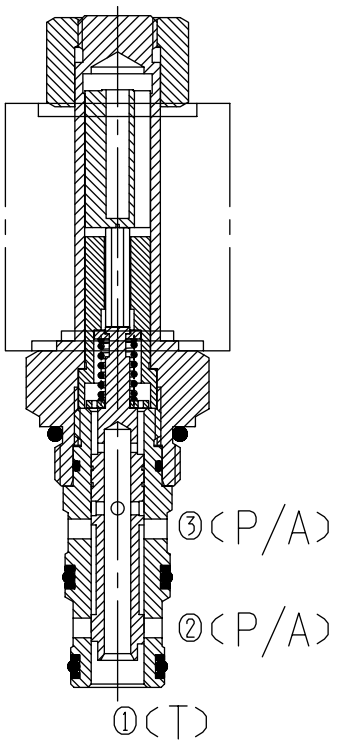

Specifications:

	210bar
Max. Working Pressure	See Performance
Flow Max.	<80ml/min at 210bar
Operating Volt	12VDC、24VDC、110VAC、220VAC
Min Voltage Requires	85% of normal voltage
Filtration Of Oil	20μm or better
Type of Standard Cavity	T4-2
Temperature	-30~+100℃ Standard Buna Seals
Standard Block Model	T4-21*/23*/24*/26*

Symbol:

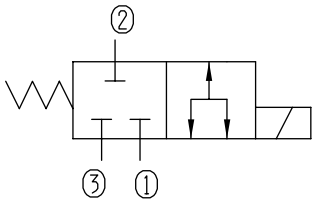

Characteristic:

32 cST Oil/40°C

③—①——(e)
③—②——(e)

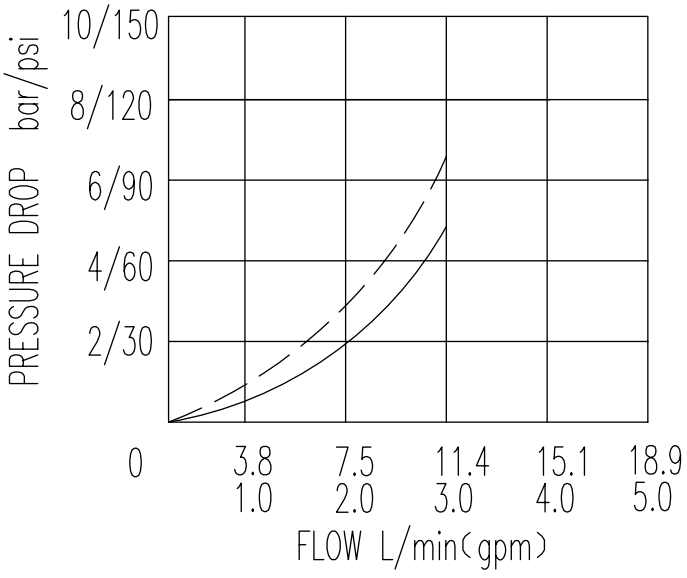

BST08S-233 Profile dimensions

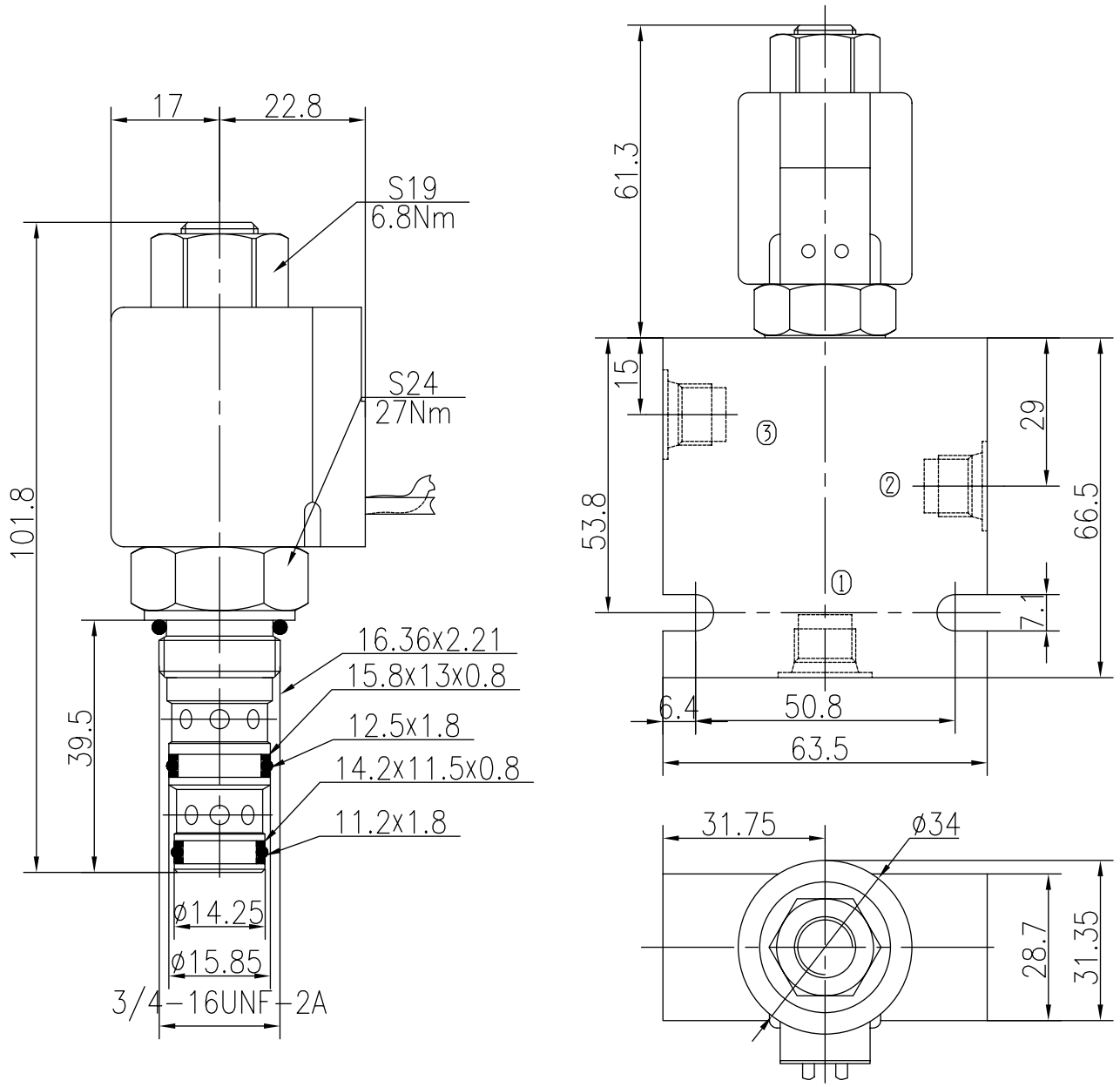

TO ORDER BST08S-233 - ___ - ___ - ___ - ___

- Solenoid Valve Function
- Body Porting (Omit for Cartridge only)
  - G1/4 4G
  - G3/8 8G
  - SAE4 4T
  - SAE6 6T
- Seals
  - Buna(Std.) N
  - Fluorocarbon V
- Voltage
  - 12 12VDC
  - 24 24VDC
  - 110 110VAC
  - 220 220VAC
- Connection
  - DL Double Leads
  - DH Electrial Outlet

Three Way Two Position(Spool-type)

BST08-234

Description of the process

When de-energized,the valve allows flow from ③ to ①,while blocking flow at ②;

When energized,the valve allows flow from ② to ①,while blocking flow at ③.

P-----(PRESSURE PORT)
A-----(WORKING PORT)
T-----(TANK PORT)

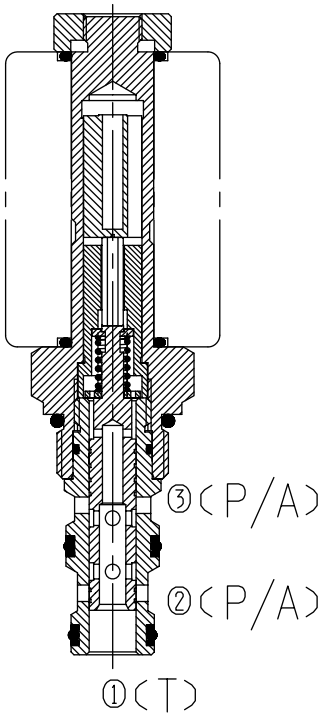

Specifications:

	210bar
Max. Working Pressure	See Performance
Flow Max.	<80ml/min at 210bar
Operating Volt	12VDC、24VDC、110VAC、220VAC
Min Voltage Requires	85% of normal voltage
Filtration Of Oil	20μm or better
Type of Standard Cavity	T4-2
Temperature	-30~+100℃ Standard Buna Seals
Standard Block Model	T4-21*/23*/24*/26*

Symbol:

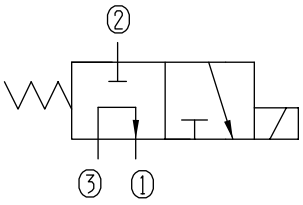

Characteristic:

32 cST Oil/40°C

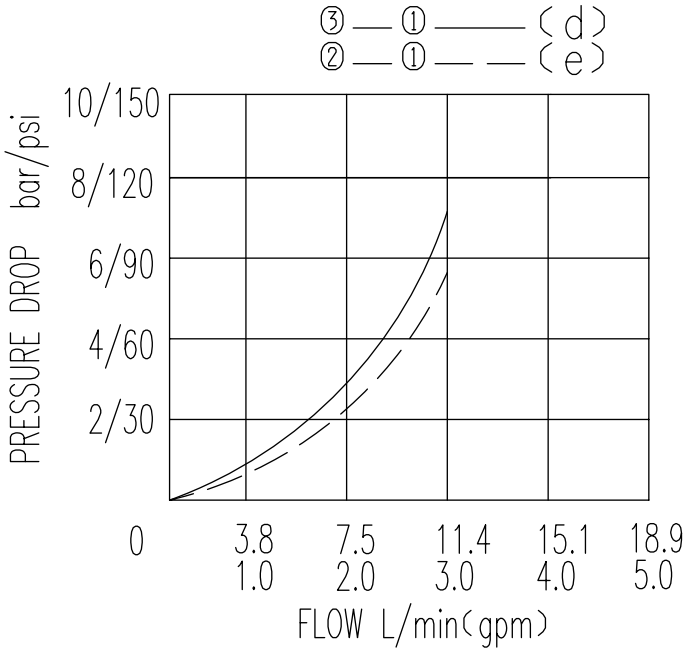

Three Way Two Position (Spool-type)

BST08-234 Profile dimensions

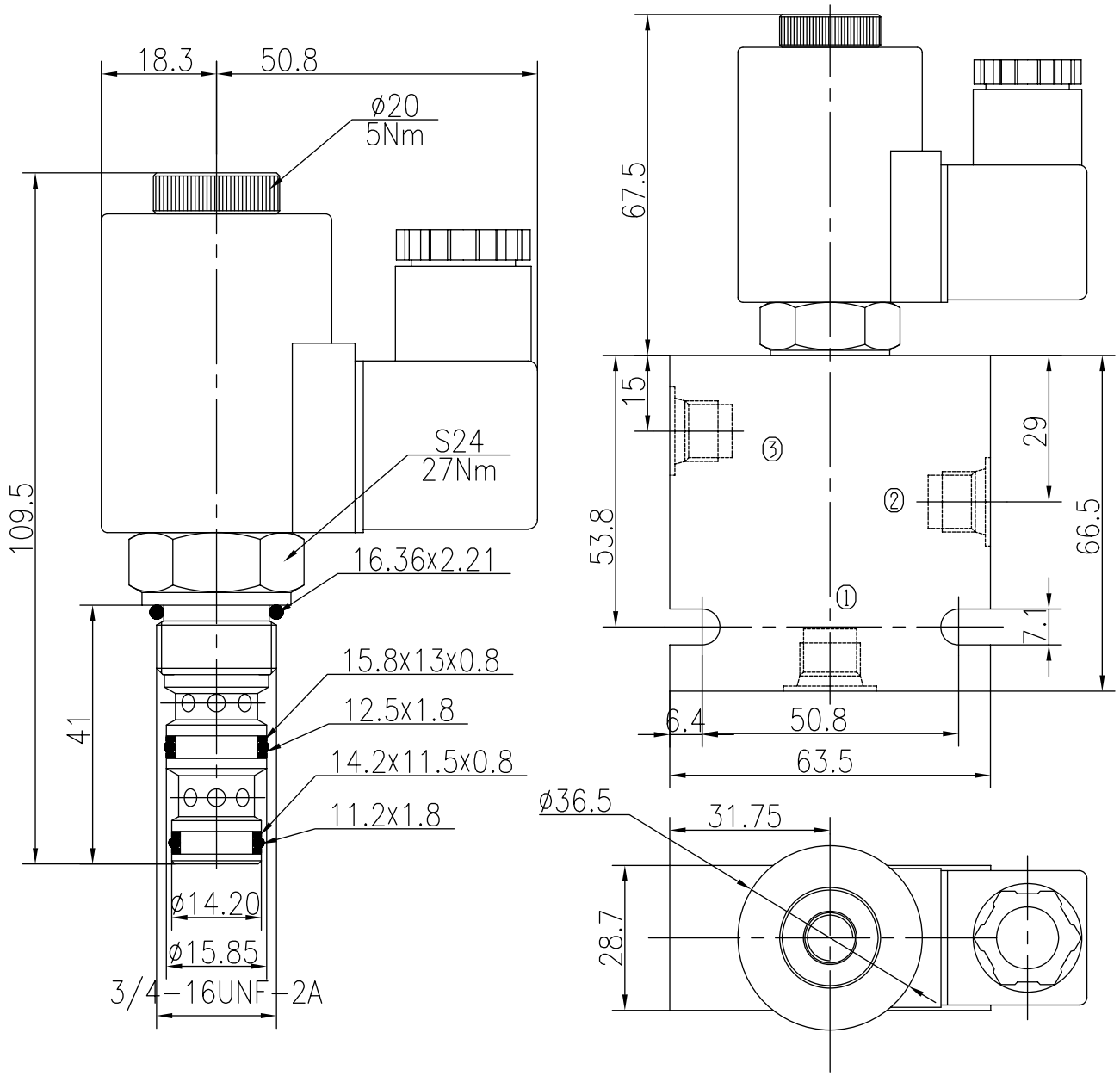

TO ORDER BST08 - 234 - _ _ - _ - _ _ _ - _ _

Solenoid Valve

Function

Body Porting

Omit for Cartridge only

G1/4 4G
G3/8 8G
SAE4 4T
SAE6 6T

Seals

Buna(Std.) N

Fluorocarbon V

Voltage

12 12VDC
24 24VDC
110 110VAC
220 220VAC

Connection

DL Double Leads

DH Electrial Outlet

Three Way Two Position(Poppet-type)

BST08-238

Description of the process

When de-energized,the valve allows flow from ① to ②,while blocking flow at ③;

When energized,the valve allows flow from ② to ③,while blocking flow at ①.

P-----(PRESSURE PORT)
A-----(WORKING PORT)
T-----(TANK PORT)

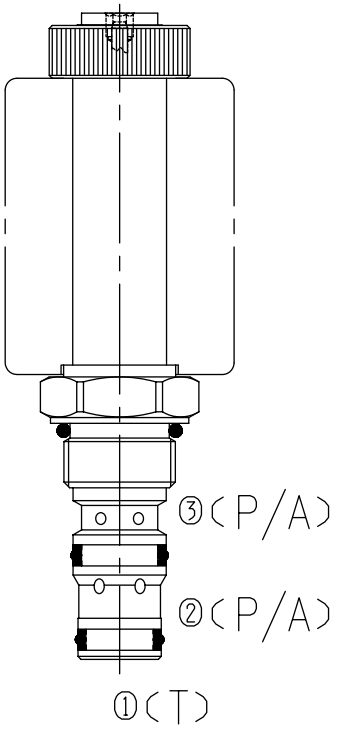

Specifications:

	210bar
Max. Working Pressure	See Performance
Flow Max.	<0.3ml/min at 210bar
Operating Volt	12VDC、24VDC、110VAC、220VAC
Min Voltage Requires	85% of normal voltage
Filtration Of Oil	20μm or better
Type of Standard Cavity	T4-2
Temperature	-30~+100℃ Standard Buna Seals
Standard Block Model	T4-21*/23*/24*/26*

Symbol:

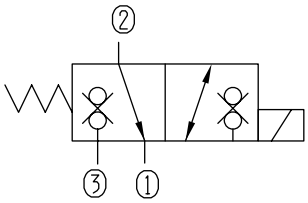

Characteristic:

32 cST Oil/40°C

②—①——(d)
③—②——(e)

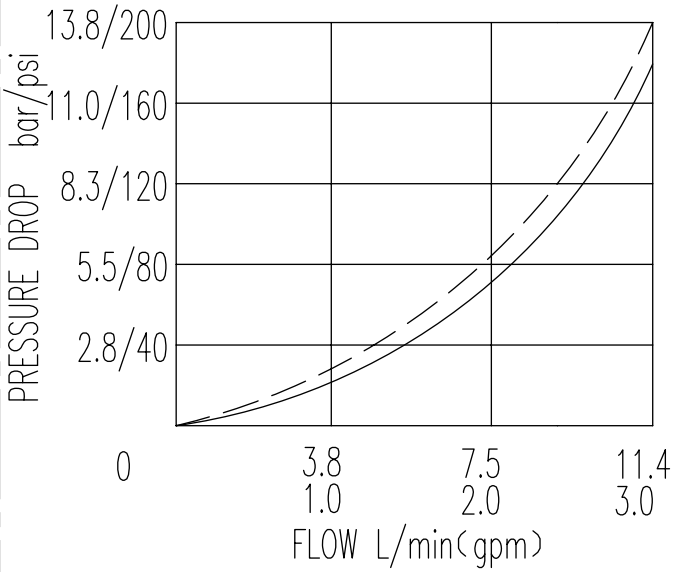

BST08-238 Profile dimensions

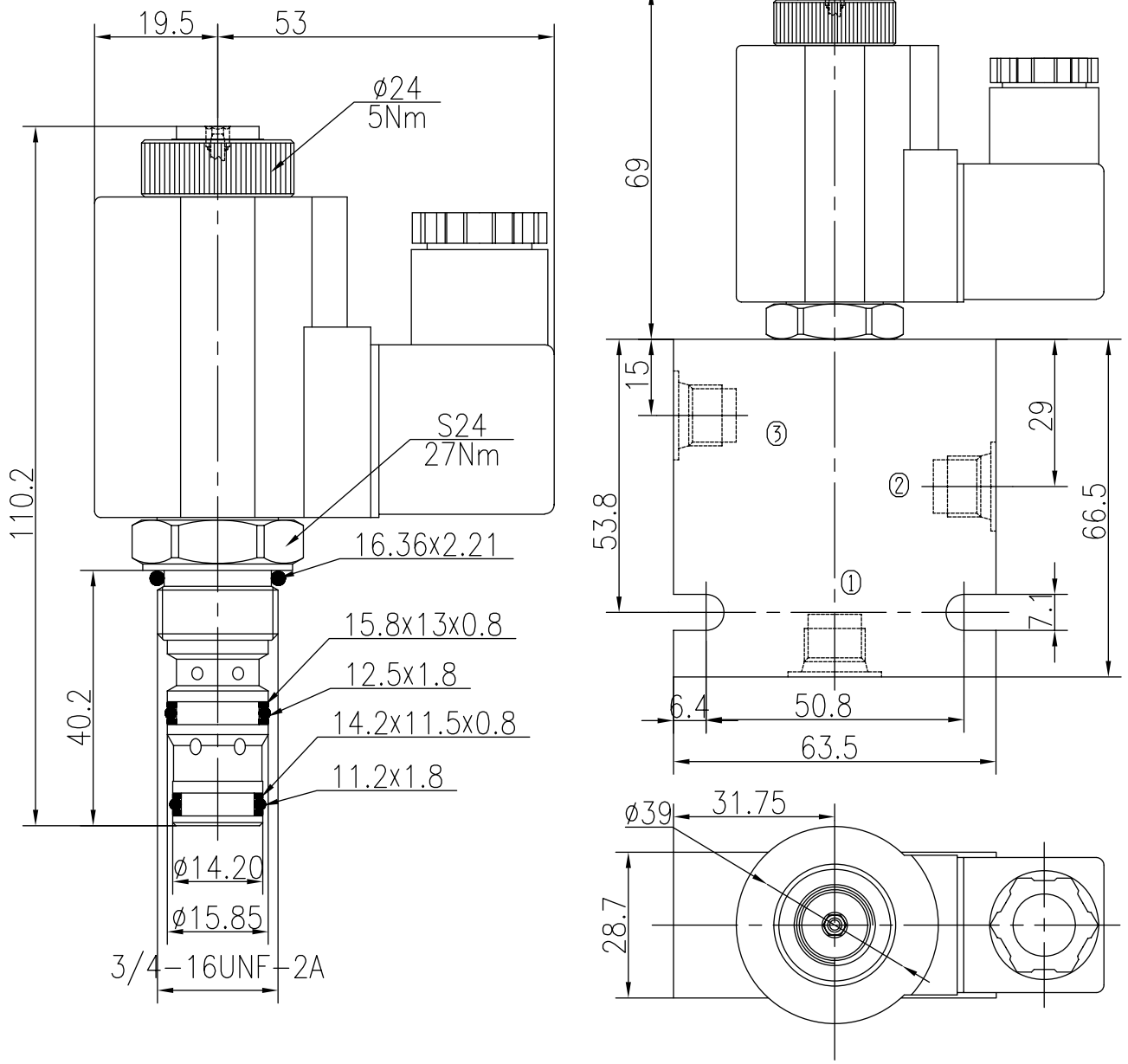

TO ORDER BST08 - 238 - ___ - ___ - ___ - ___

Solenoid Valve Function

Body Porting
Omit for Cartridge only

G1/4 4G
G3/8 8G
SAE4 4T
SAE6 6T

Seals
Buna(Std.) N
Fluorocarbon V

Voltage
12 12VDC
24 24VDC
110 110VAC
220 220VAC

Connection
DL Double Leads
DH Electrial Outlet

Three Way Two Position(Spool-type)

BST10-230

Description of the process

When de-energized,the valve allows flow from ② to ③,while blocking flow at ①;

When energized,the valve allows flow from ① to ②,while blocking flow at ③.

P---(PRESSURE PORT)
A---(WORKING PORT)
T---(TANK PORT)

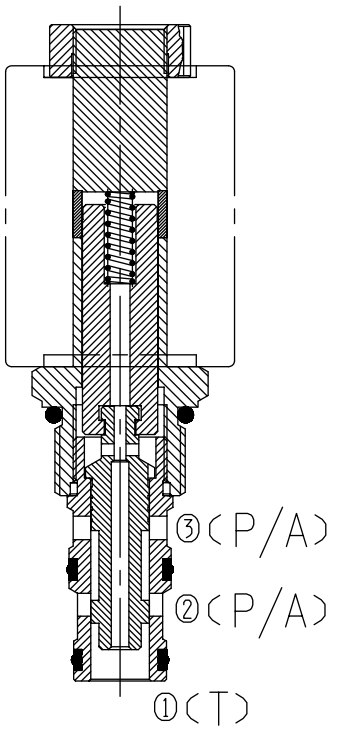

Specifications:

	210bar
Max. Working Pressure	See Performance
Flow Max.	<80ml/min at 210bar
Operating Volt	12VDC、24VDC、110VAC、220VAC
Min Voltage Requires	85% of normal voltage
Filtration Of Oil	20μm or better
Type of Standard Cavity	T5-2
Temperature	-30~+100℃ Standard Buna Seals
Standard Block Model	T5-21*/23*/24*/26*

Symbol:

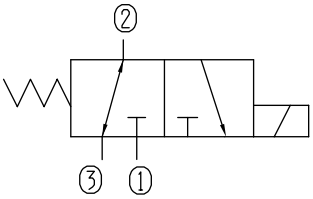

Characteristic:

32 cST Oil/40°C

②— ③— —(d)
②— ①— —(e)

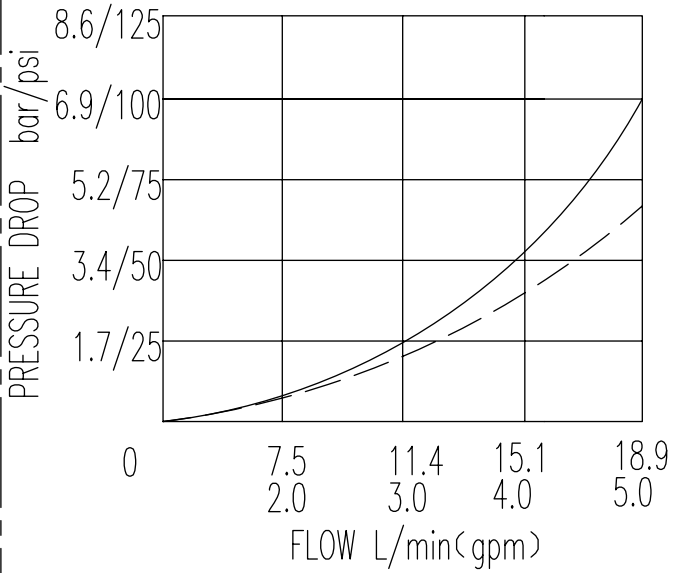

BST10-230 Profile dimensions

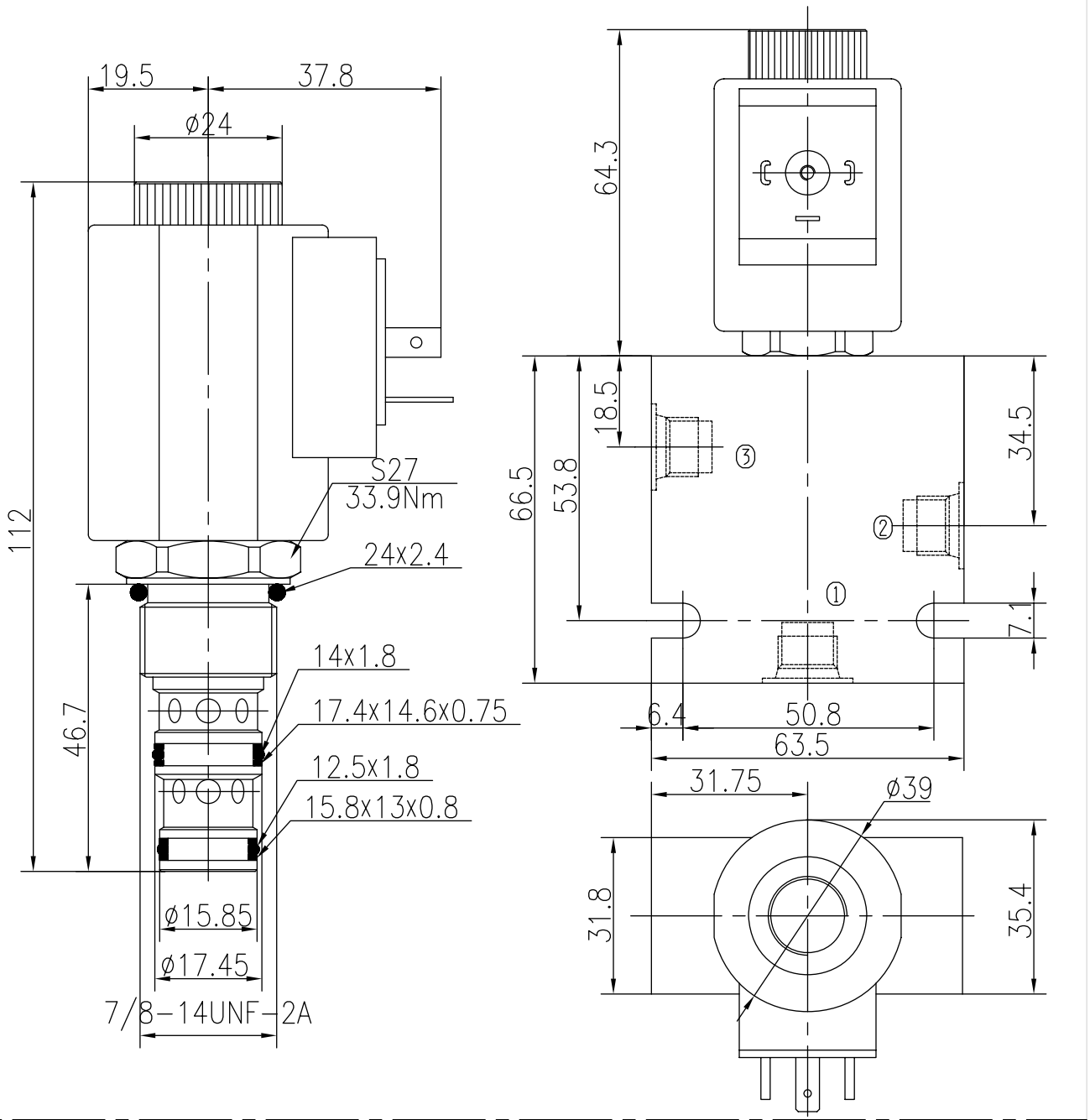

TO ORDER BST10-230 - - - -

Solenoid Valve Function

Body Porting
Omit for Cartridge only

G1/4 4G
G3/8 8G
SAE4 4T
SAE6 6T

Seals
Buna(Std.) N
Fluorocarbon V

Voltage
12 12VDC
24 24VDC
110 110VAC
220 220VAC

Connection
DL Double Leads
DH Electrial Outlet

Three Way Two Position(Spool-type)

BST10-231

Description of the process

When de-energized,the valve allows flow from ② to ①,while blocking flow at ③;

When energized,the valve allows flow from ③ to ①,while blocking flow at ②.

P---(PRESSURE PORT)
A---(WORKING PORT)
T---(TANK PORT)

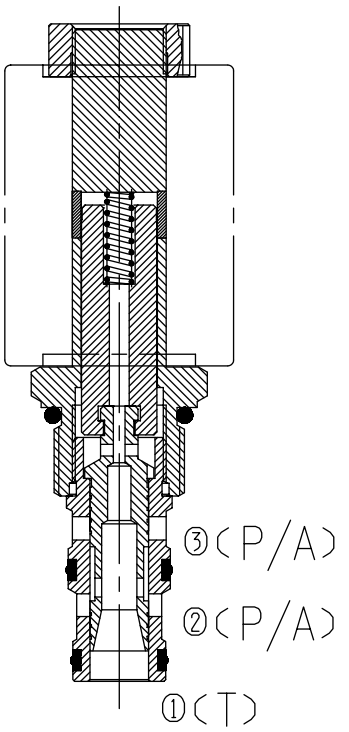

Specifications:

	210bar
Max. Working Pressure	See Performance
Flow Max.	<80ml/min at 210bar
Operating Volt	12VDC、24VDC、110VAC、220VAC
Min Voltage Requires	85% of normal voltage
Filtration Of Oil	20μm or better
Type of Standard Cavity	T5-2
Temperature	-30~+100℃ Standard Buna Seals
Standard Block Model	T5-21*/23*/24*/26*

Symbol:

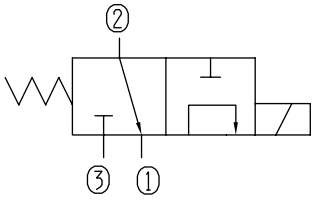

Characteristic:

32 cST Oil/40°C

②—①——(d)
③—①——(e)

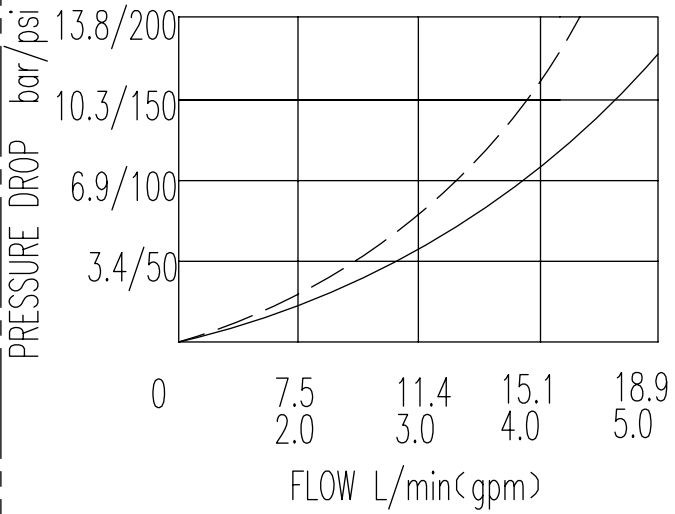

BST10-231 Profile dimensions

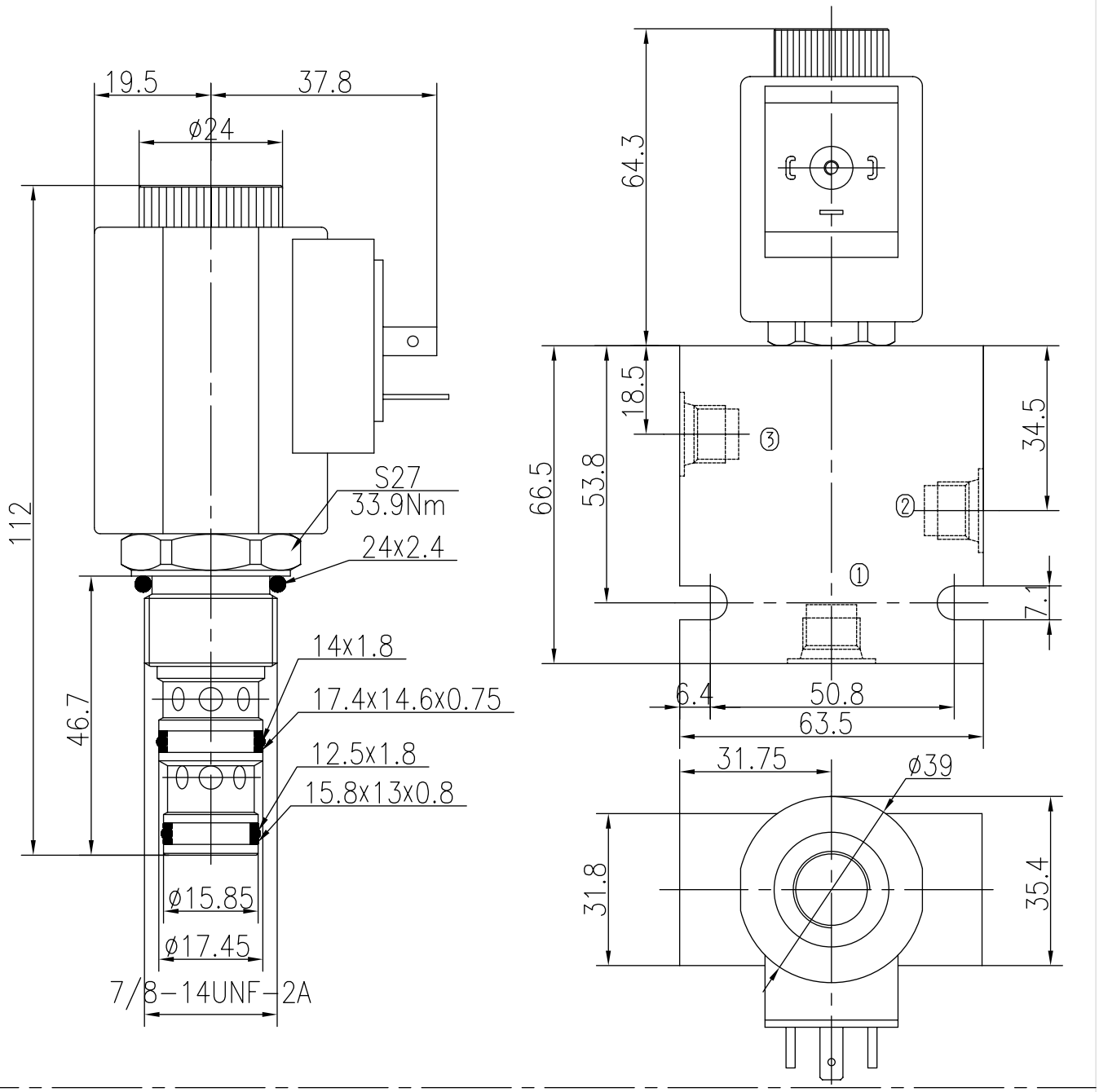

TO ORDER BST10-231 - - - - -

Solenoid Valve Function

Body Porting
Omit for Cartridge only

G1/4 4G
G3/8 8G
SAE4 4T
SAE6 6T

Seals
Buna(Std.) N
Fluorocarbon V

Voltage
12 12VDC
24 24VDC
110 110VAC
220 220VAC

Connection
DL Double Leads
DH Electrial Outlet

Three Way Two Position(Spool-type)

BST10-232

Description of the process

When de-energized,the valve allows flow from ② to ①,while blocking flow at ③;

When energized,the valve allows flow from ③ to ②,while blocking flow at ①.

P---(PRESSURE PORT)
A---(WORKING PORT)
T---(TANK PORT)

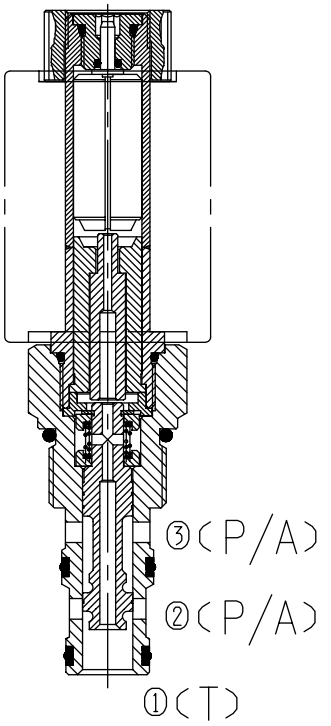

Specifications:

	210bar
Max. Working Pressure	See Performance
Flow Max.	<80ml/min at 210bar
Operating Volt	12VDC、24VDC、110VAC、220VAC
Min Voltage Requires	85% of normal voltage
Filtration Of Oil	20μm or better
Type of Standard Cavity	T5-2
Temperature	-30~+100℃ Standard Buna Seals
Standard Block Model	T5-21*/23*/24*/26*

Symbol:

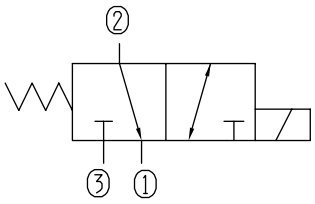

Characteristic:

32 cST Oil/40°C

②—①——(d)
③—②——(e)

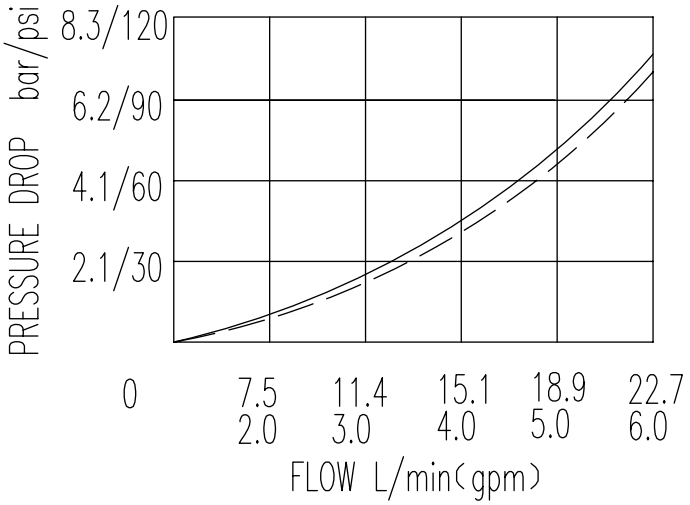

BST10-232 Profile dimensions

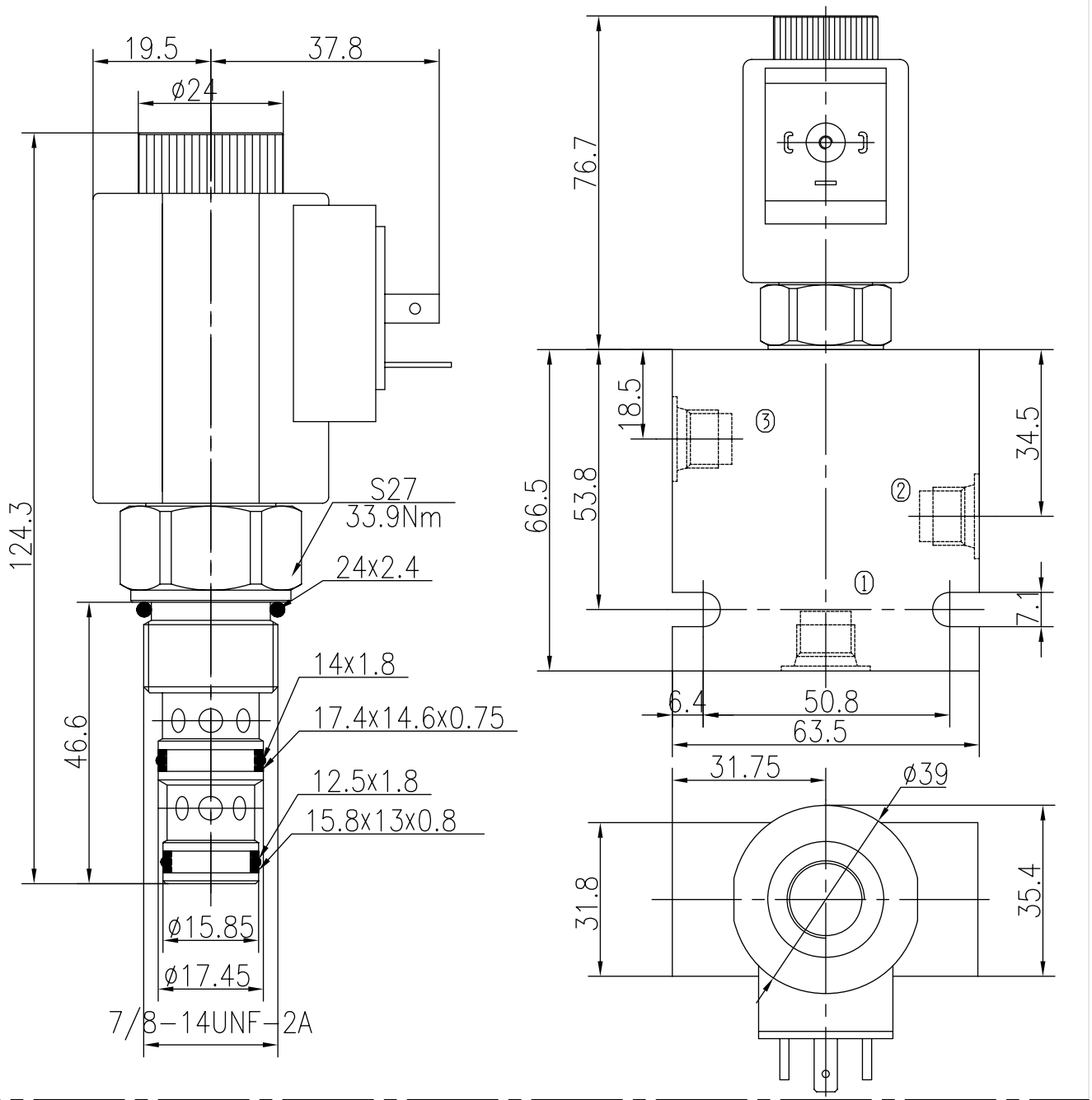

TO ORDER BST10-232 - - - - -

Solenoid Valve Function

Body Porting
Omit for Cartridge only

G1/4 4G
G3/8 8G
SAE4 4T
SAE6 6T

Seals
Buna(Std.) N
Fluorocarbon V

Voltage
12 12VDC
24 24VDC
110 110VAC
220 220VAC

Connection
DL Double Leads
DH Electrial Outlet

Three Way Two Position(Poppet-type)

BST10-238

Description of the process

When de-energized,the valve allows flow from ② to ①,while blocking flow at ③;

When energized,the valve allows flow from ③ to ②,while blocking flow at ①.

P---(PRESSURE PORT)
A---(WORKING PORT)
T---(TANK PORT)

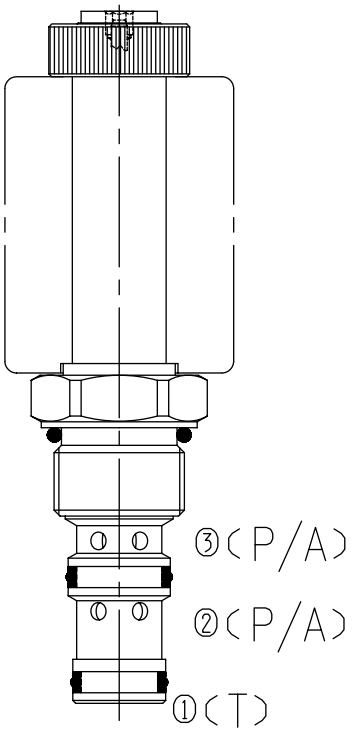

Specifications:

	210bar
Max. Working Pressure	See Performance
Flow Max.	<0.3ml/min at 210bar
Operating Volt	12VDC、24VDC、110VAC、220VAC
Min Voltage Requires	85% of normal voltage
Filtration Of Oil	20μm or better
Type of Standard Cavity	T5-2
Temperature	-30~+100℃ Standard Buna Seals
Standard Block Model	T5-21*/23*/24*/26*

Symbol:

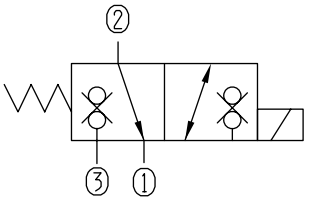

32 cST Oil/40°C

Flow Characteristic:

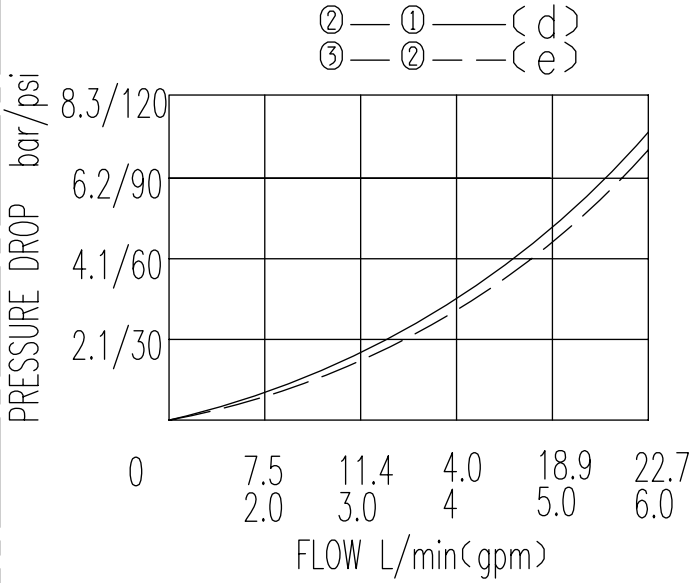

BST10-238

Profile dimensions

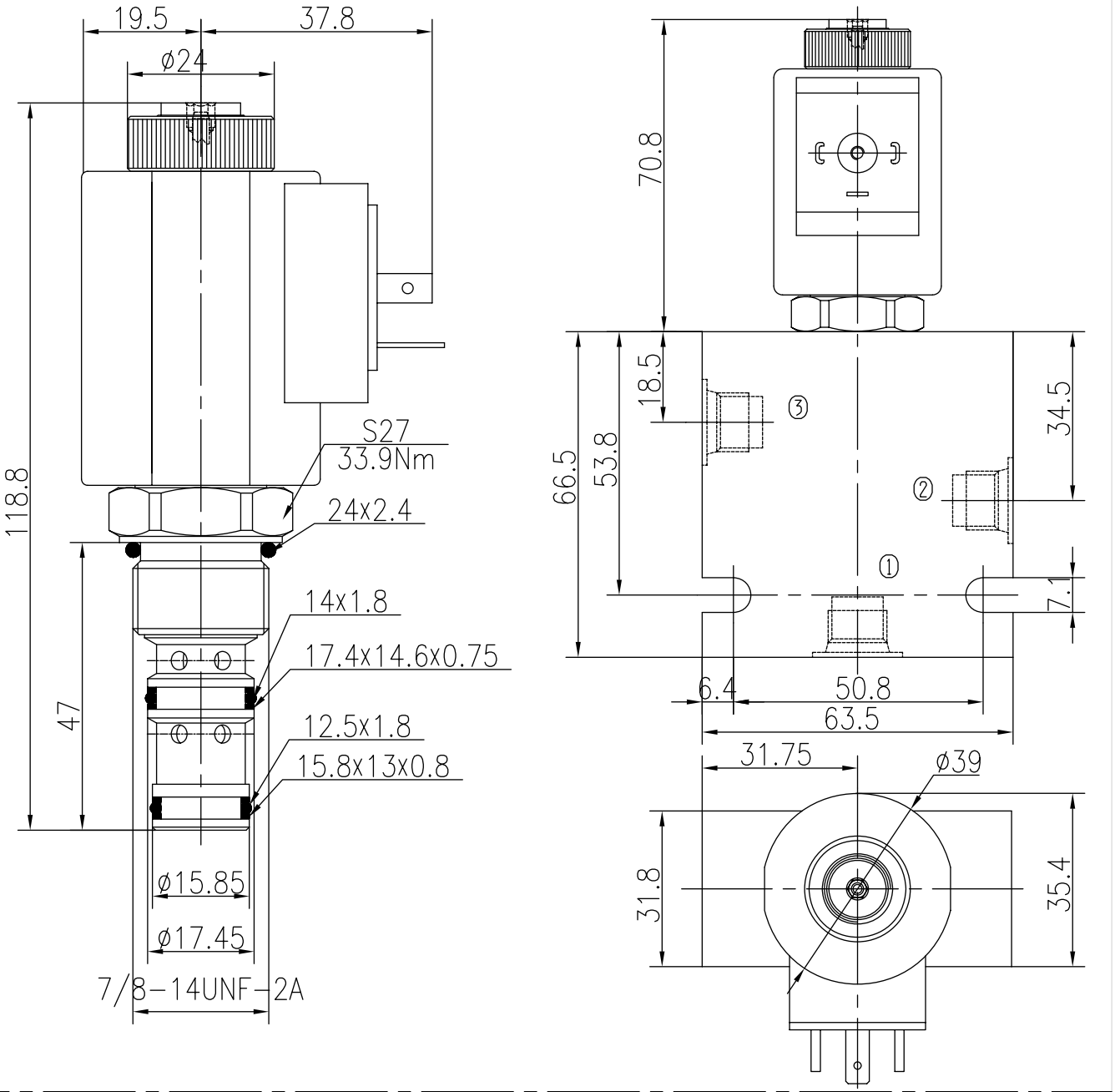

TO ORDER

BST10 - 238 - - - - -

Solenoid Valve Function

Body Porting
Omit for Cartridge only

G1/4 4G
G3/8 8G
SAE4 4T
SAE6 6T

Seals
Buna(Std.) N
Fluorocarbon V

Voltage
12 12VDC
24 24VDC
110 110VAC
220 220VAC

Connection
DL Double Leads
DH Electrial Outlet

Three Way Two Position(Spool-type)

BST12-232

Description of the process

When de-energized,the valve allows flow from ② to ①,while blocking flow

When energized,the valve allows flow from ③ to ②,while blocking flow at ①.

P---(PRESSURE PORT)
A---(WORKING PORT)
T---(TANK PORT)

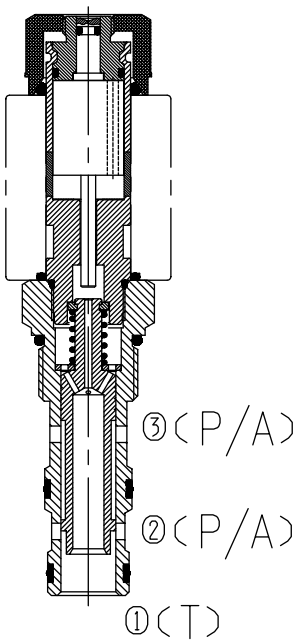

Specifications:

	210bar
Max. Working Pressure	See Performance
Flow Max.	<330ml/min at 210bar
Operating Volt	12VDC、24VDC、110VAC、220VAC
Min Voltage Requires	85% of normal voltage
Filtration Of Oil	20μm or better
Type of Standard Cavity	T6-2
Temperature	-30~+100℃ Standard Buna Seals
Standard Block Model	T6-21*/23*/24*/26*

Symbol:

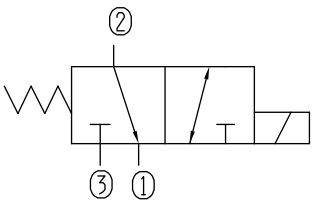

32 cST Oil/40°C

Characteristic:

2 to 1 or 3 to 2

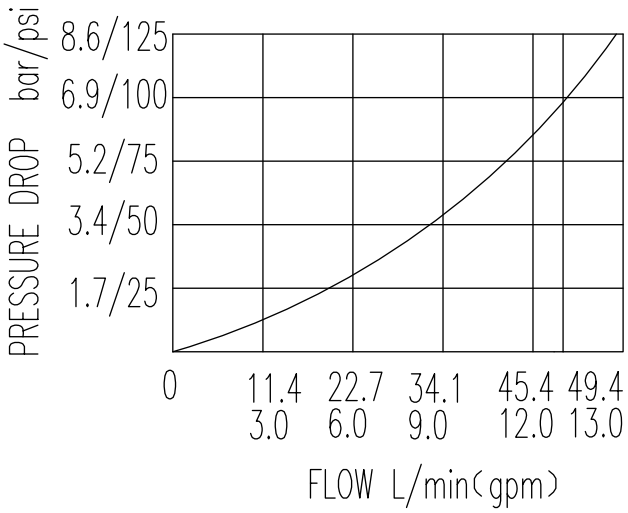

BST12-232

Profile dimensions

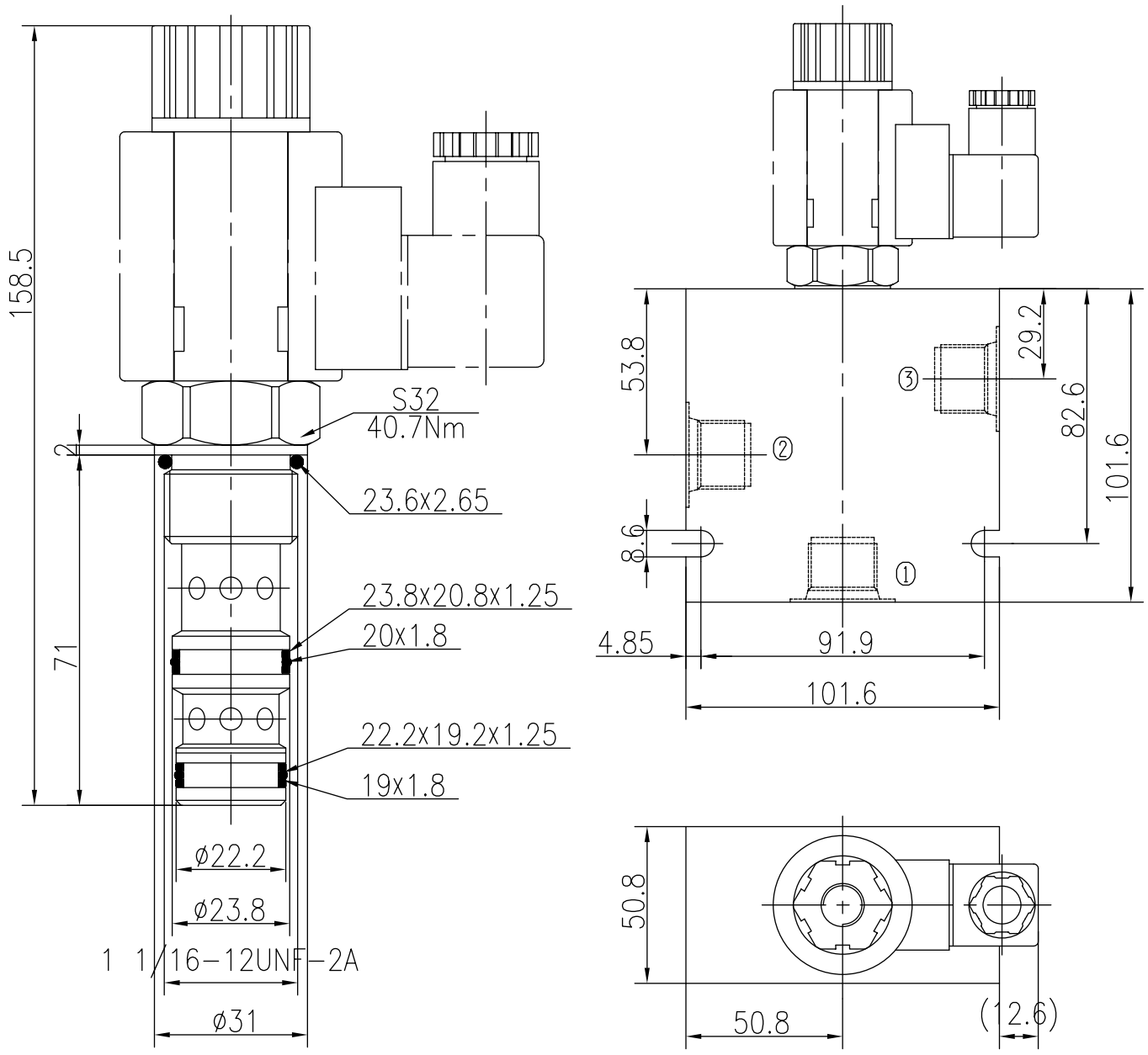

TO ORDER

BST12 -232 – – – – –

Solenoid Valve

Function

Body Porting

Omit for Cartridge only

G3/4 5G
G1 6G
SAE10 10T
SAE12 12T

Seals

Buna(Std.) N

Fluorocarbon V

Voltage

12 12VDC
24 24VDC

Connection

DL Double Leads

DH Electrial Outlet

Four Way Two Position(Spool-type)

BST08-240

Description of the process

When de-energized,the valve blocks flow to all ports;

When energized,the valve allows flow between ③ to ④,as well as ② to ①.

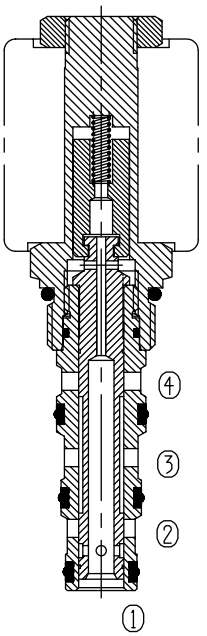

Specifications:

Max. Working Pressure	210bar
Flow Max.	See Performance
Operating Volt	<80ml/min at 210bar
Min Voltage Requires	12VDC、24VDC、110VAC、220VAC
Filtration Of Oil	85% of normal voltage
Type of Standard Cavity	20μm or better
Temperature	T4-3
Standard Block Model	-30~+100℃ Standard Buna Seals
	T4-31*/33*/34*/36*

Symbol:

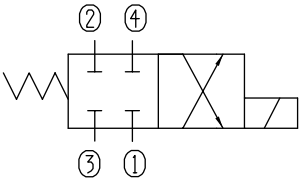

Characteristic:

32 cST Oil/40°C

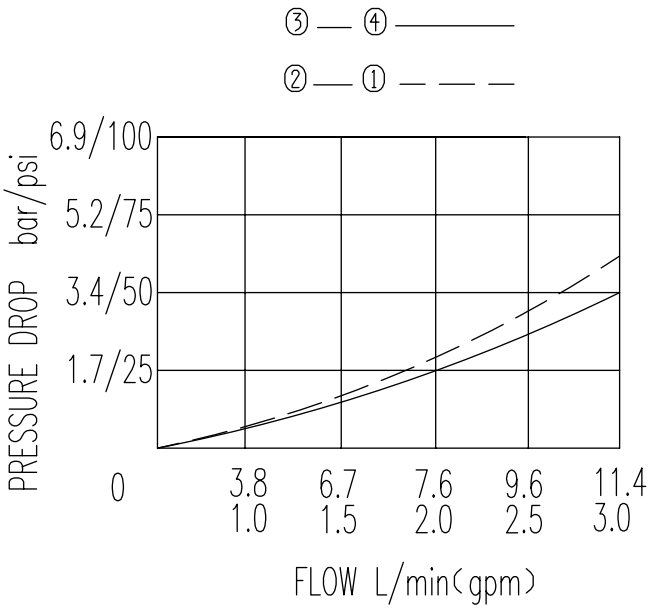

BST08-240 Profile dimensions

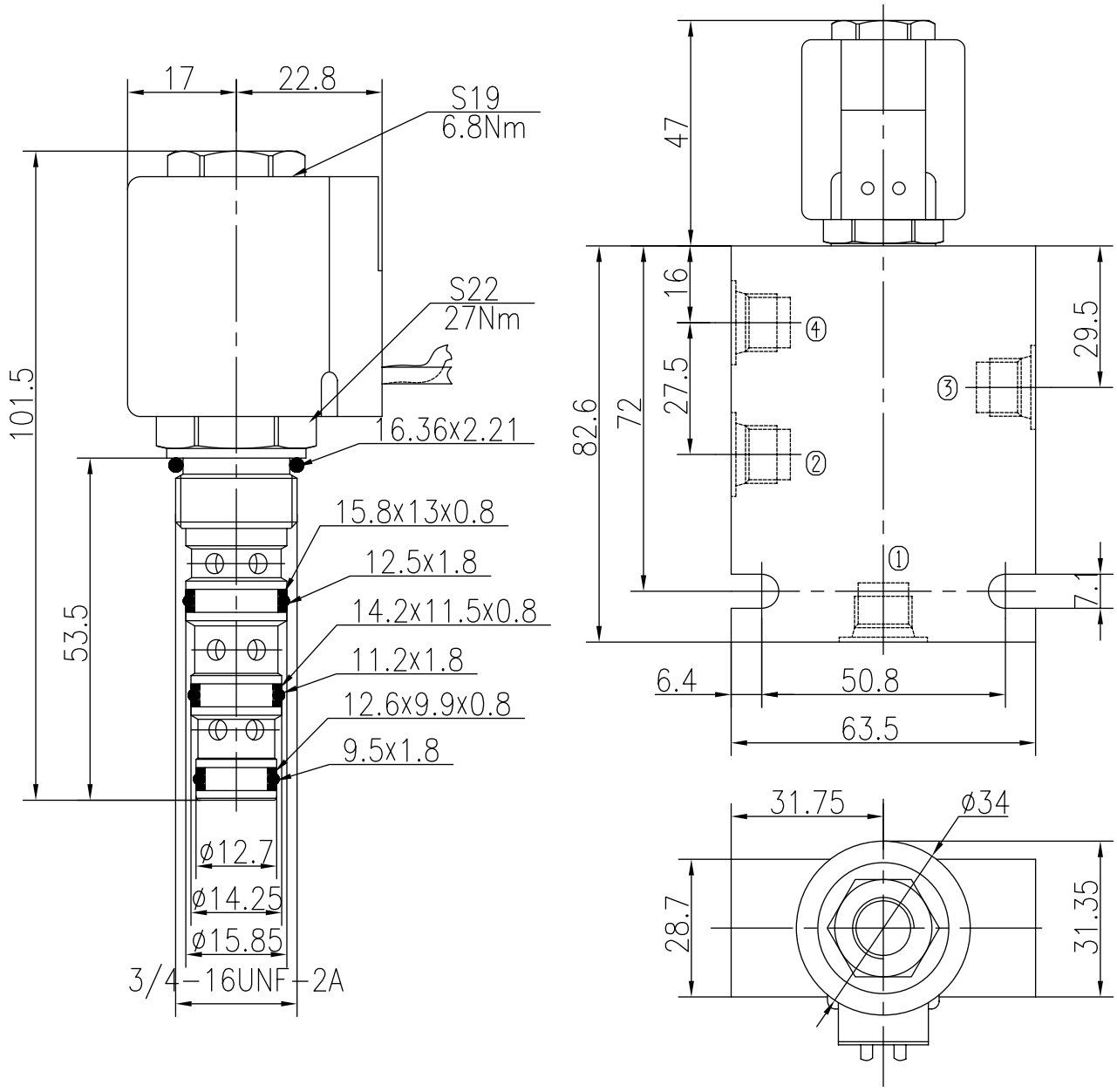

TO ORDER BST08 -240 - - - - -

- Solenoid Valve Function
- Body Porting (Omit for Cartridge only)
  - G1/4 4G
  - G3/8 8G
  - SAE4 4T
  - SAE6 6T
- Seals
  - Buna(Std.) N
  - Fluorocarbon V
- Voltage
  - 12 12VDC
  - 24 24VDC
  - 110 110VAC
  - 220 220VAC
- Connection
  - DL Double Leads
  - DH Electrial Outlet

Four Way Two Position(Spool-type)

BST08-241

Description of the process

When de-energized,the valve allows flow from ③ to ②,and ① to ④;

When energized,the valve allows flow between ③ to ④,as well as ② to ①.

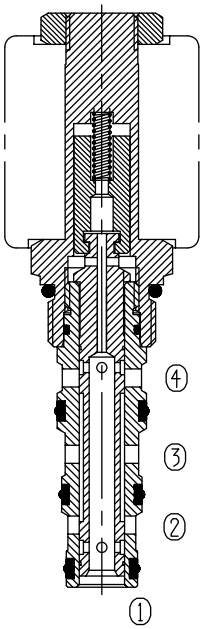

Specifications:

Max. Working Pressure	210bar
Flow Max.	See Performance
Operating Volt	<80ml/min at 210bar
Min Voltage Requires	12VDC、24VDC、110VAC、220VAC
Filtration Of Oil	85% of normal voltage
Type of Standard Cavity	20μm or better
Temperature	T4-3
Standard Block Model	-30~+100℃ Standard Buna Seals
	T4-31*/33*/34*/36*

Symbol:

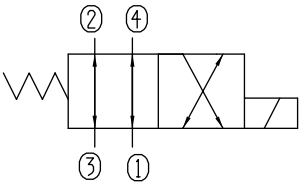

Characteristic:

32 cST Oil/40°C

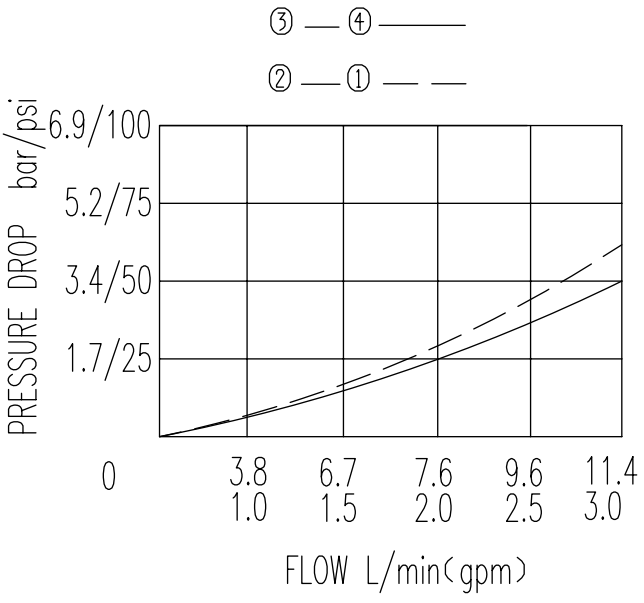

BST08-241 Profile dimensions

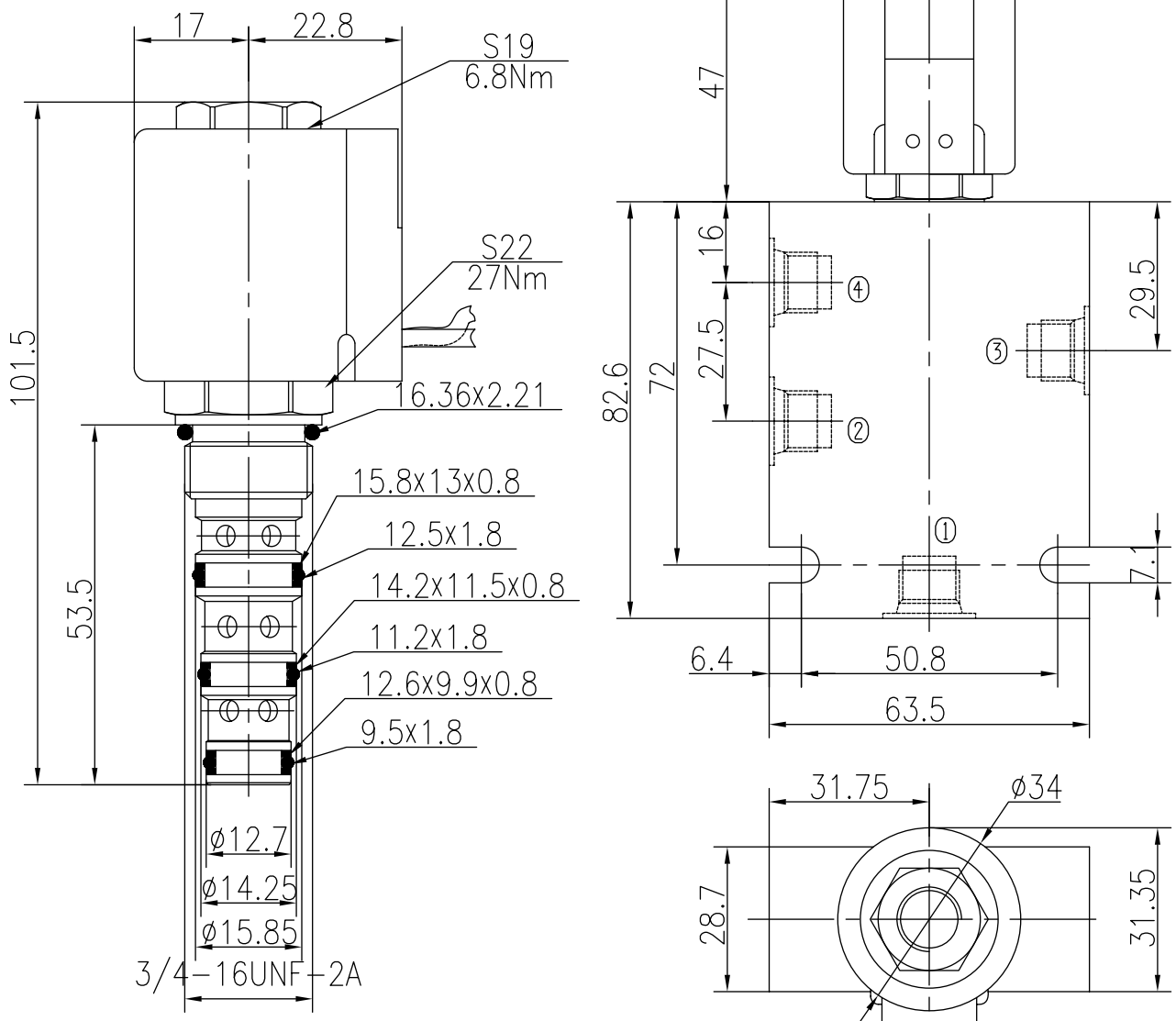

TO ORDER BST08 -241 - - - - -

Solenoid Valve
Function

Body Porting
Omit for Cartridge only

G1/4 4G
G3/8 8G
SAE4 4T
SAE6 6T

Seals
Buna(Std.) N
Fluorocarbon V

Voltage
12 12VDC
24 24VDC
110 110VAC
220 220VAC

Connection
DL Double Leads
DH Electrial Outlet

Four Way Two Position(Spool-type)

BST08-242

Description of the process

When de-energized,the valve allows flow from ③ to ④,and ② to ①;

When energized,the valve allows flow between ③ to ②,as well as ④ to ①.

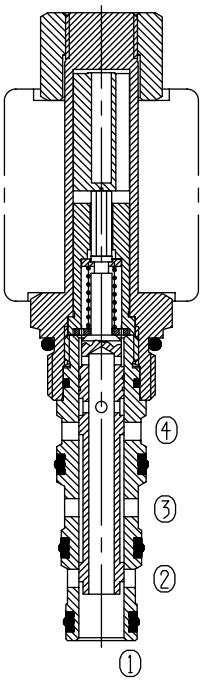

Specifications:

Max. Working Pressure	210bar
Flow Max.	See Performance
Operating Volt	<80ml/min at 210bar
Min Voltage Requires	12VDC、24VDC、110VAC、220VAC
Filtration Of Oil	85% of normal voltage
Type of Standard Cavity	20μm or better
Temperature	T4-3
Standard Block Model	-30~+100℃ Standard Buna Seals
	T4-31*/33*/34*/36*

Symbol:

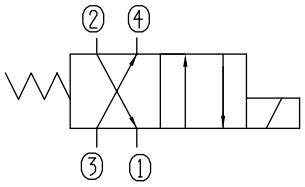

Characteristic:

32 cST Oil/40°C

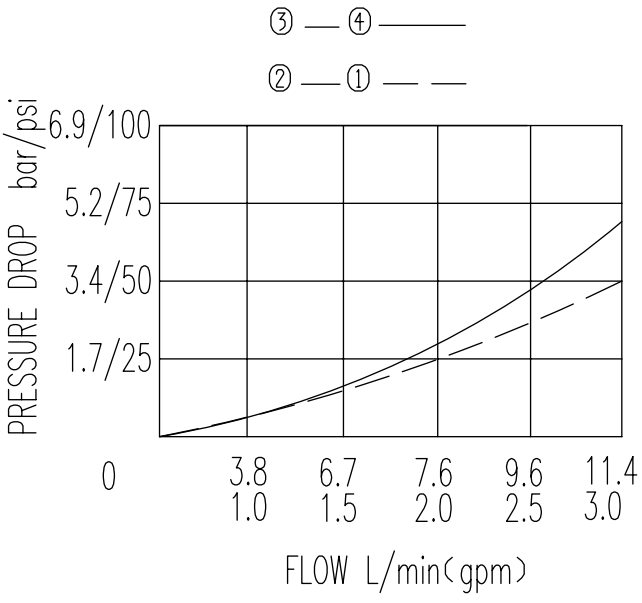

BST08-242 Profile dimensions

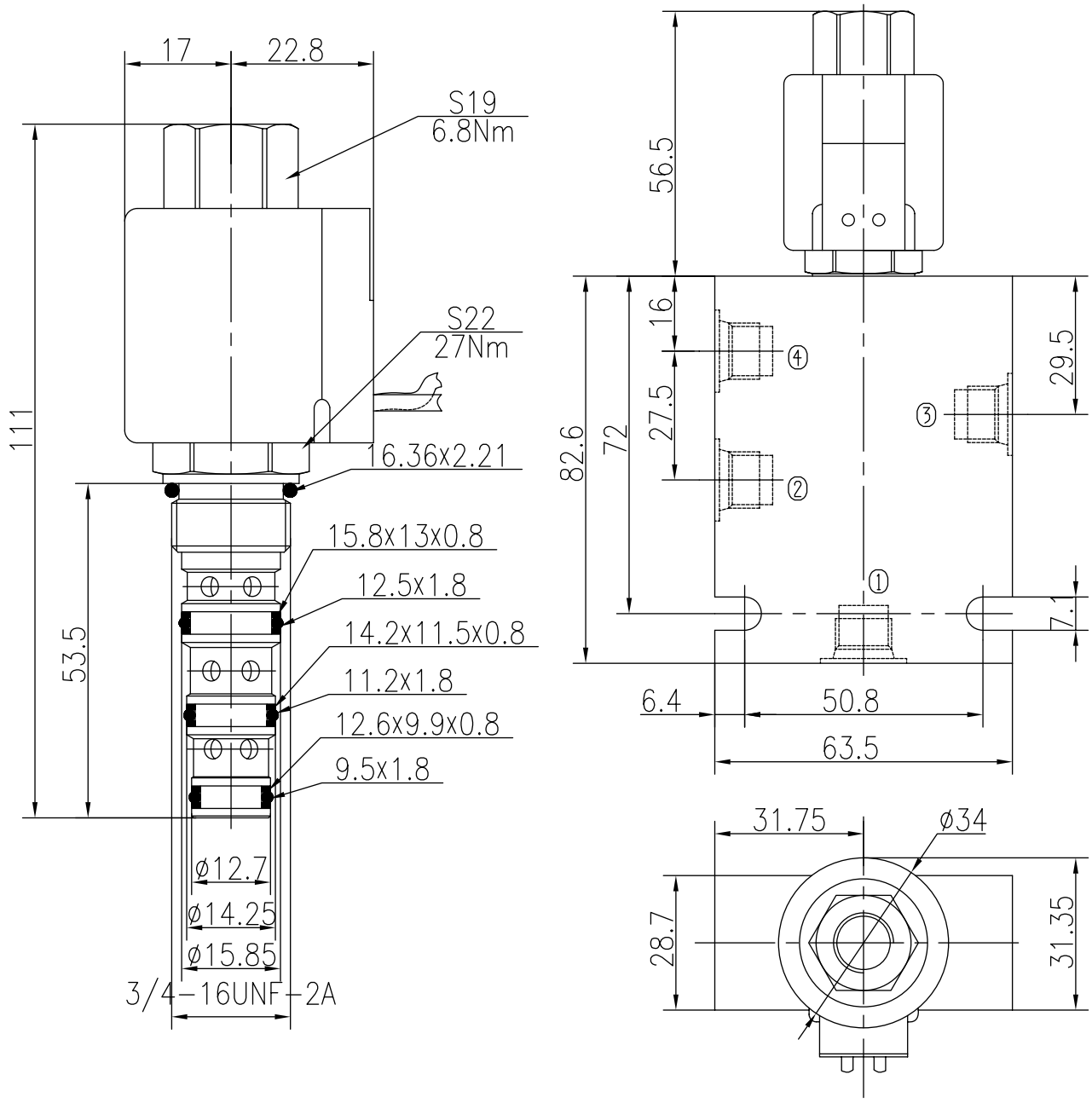

TO ORDER BST08 -242 - - - - -

- Solenoid Valve Function
- Body Porting (Omit for Cartridge only)
  - G1/4 4G
  - G3/8 8G
  - SAE4 4T
  - SAE6 6T
- Seals
  - Buna(Std.) N
  - Fluorocarbon V
- Voltage
  - 12 12VDC
  - 24 24VDC
  - 110 110VAC
  - 220 220VAC
- Connection
  - DL Double Leads
  - DH Electrial Outlet

Four Way Two Position(Spool-type)

BST08-243

Description of the process

When de-energized,the valve allows flow from ② to ①,and ③ to ④;

When energized,the valve blocks flow to all ports.

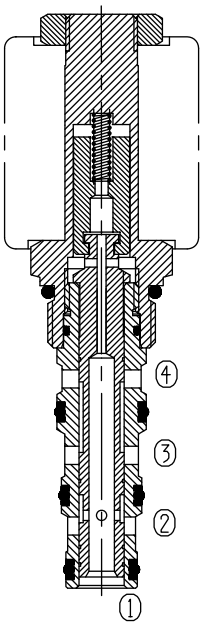

Specifications:

Max. Working Pressure	210bar
Flow Max.	See Performance
Operating Volt	<80ml/min at 210bar
Min Voltage Requires	12VDC、24VDC、110VAC、220VAC
Filtration Of Oil	85% of normal voltage
Type of Standard Cavity	20μm or better
Temperature	T4-3
Standard Block Model	-30~+100℃ Standard Buna Seals
	T4-31*/33*/34*/36*

Symbol:

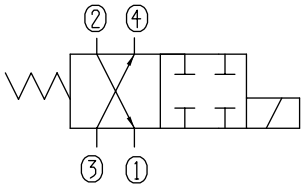

Characteristic:

32 cST Oil/40°C

③ — ④ ———

② — ① — —

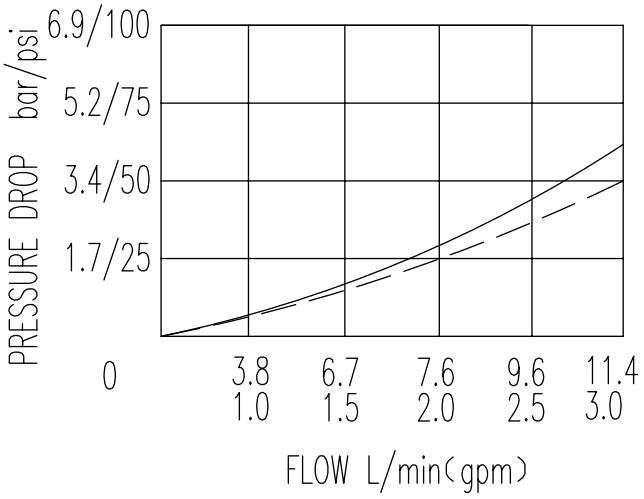

BST08-243 Profile dimensions

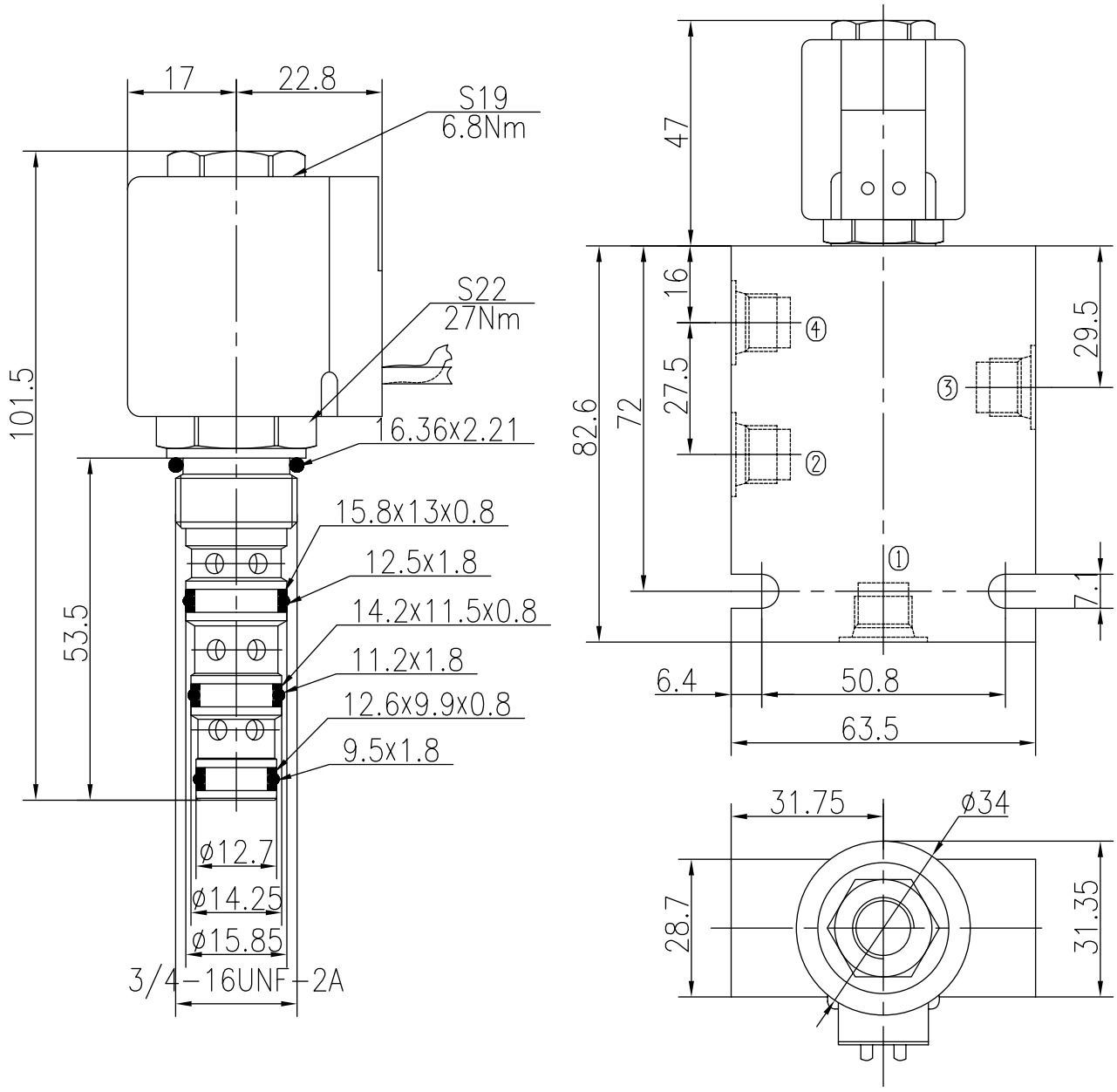

TO ORDER BST08 -243 - - - - -

Solenoid Valve Function

Body Porting
Omit for Cartridge only

G1/4 4G
G3/8 8G
SAE4 4T
SAE6 6T

Seals
Buna(Std.) N
Fluorocarbon V

Voltage
12 12VDC
24 24VDC
110 110VAC
220 220VAC

Connection
DL Double Leads
DH Electrial Outlet

Four Way Two Position (Spool-type)

BST10-240

Description of the process

When de-energized,the valve blocks flow to all ports;

When energized,the valve allows flow between ③ to ④,as well as ② to ①.

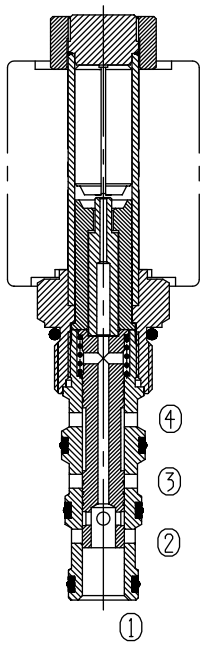

Specifications:

Max. Working Pressure	210bar
Flow Max.	See Performance
Operating Volt	<120ml/min at 210bar
Min Voltage Requires	12VDC、24VDC、110VAC、220VAC
Filtration Of Oil	85% of normal voltage
Type of Standard Cavity	20μm or better
Temperature	T5-3
Standard Block Model	-30~+100℃ Standard Buna Seals
	T5-31*/33*/34*/36*

Symbol:

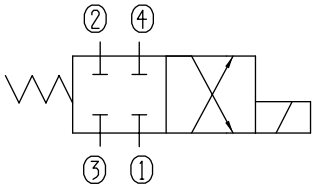

Characteristic:

32 cST Oil/40°C

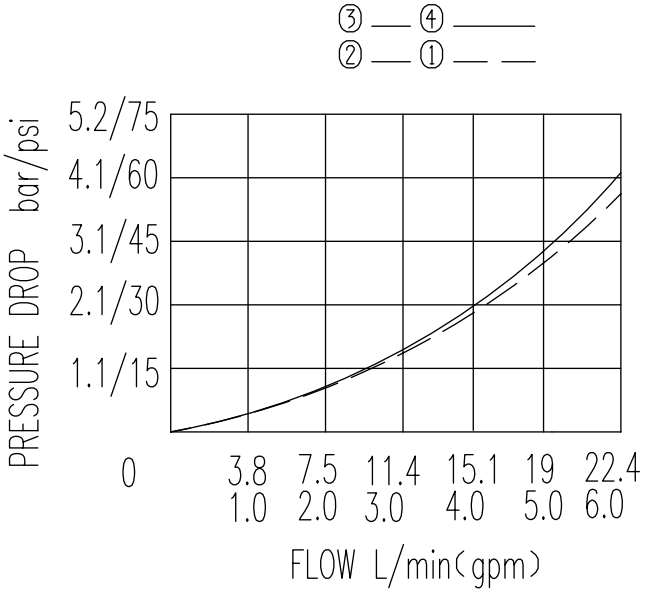

BST10-240 Profile dimensions

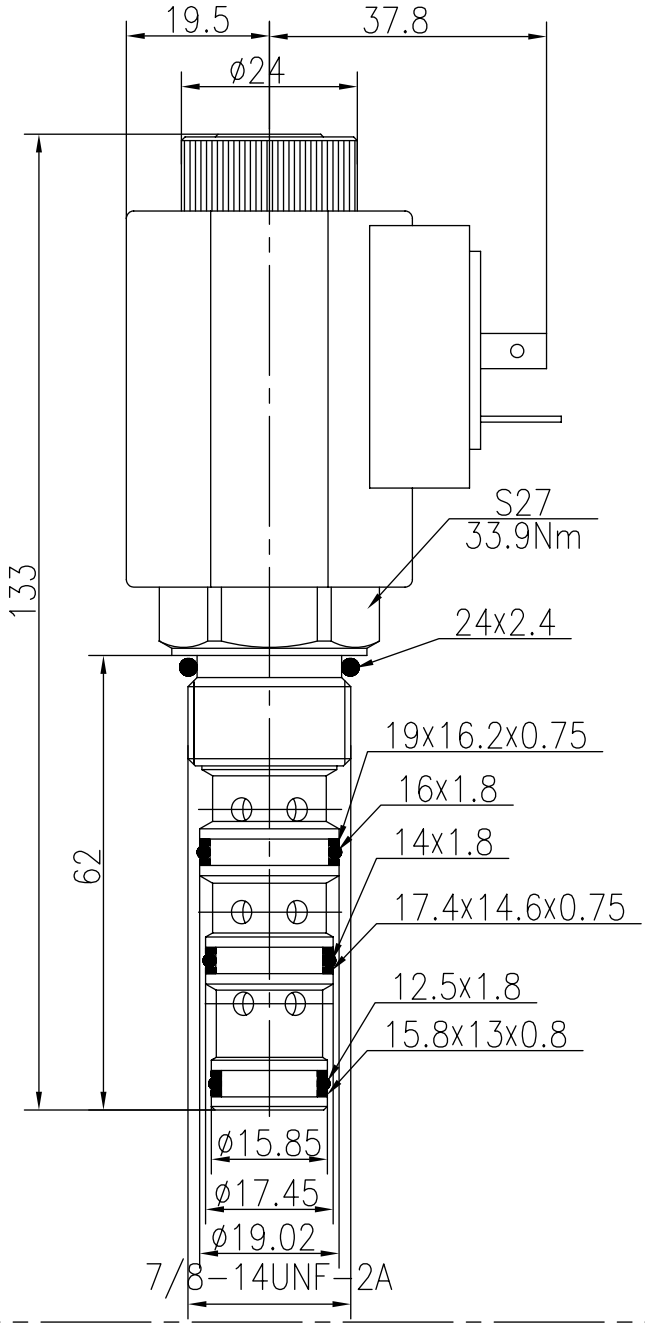

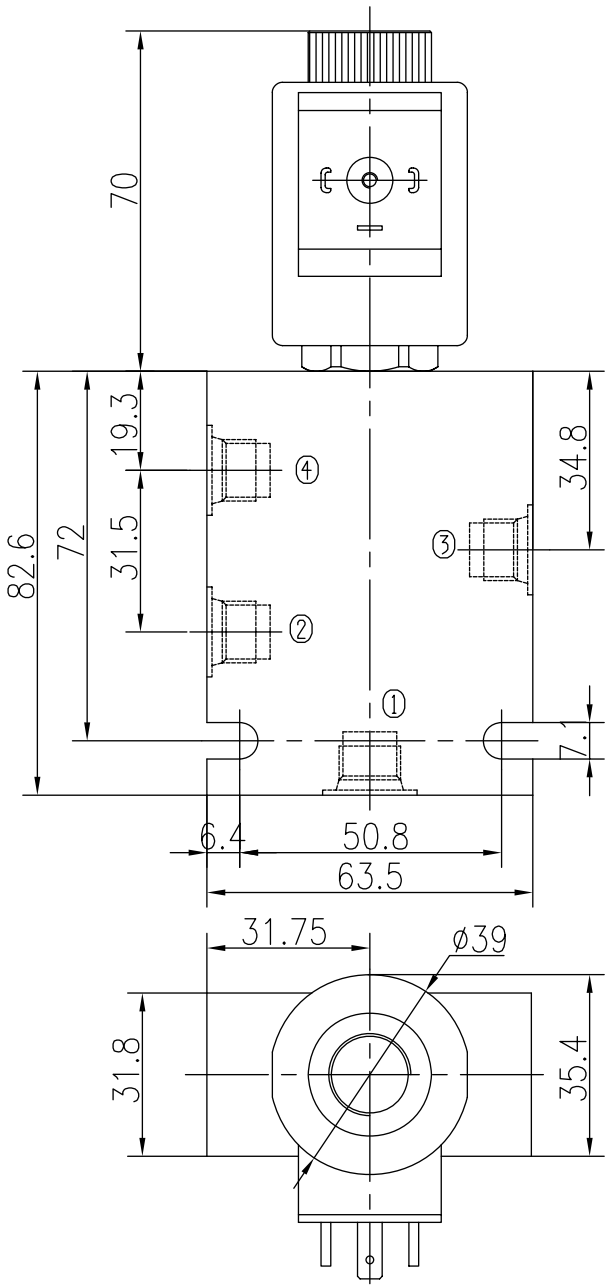

TO ORDER BST10 -240 - - - - -

Solenoid Valve Function

Body Porting
Omit for Cartridge only

G1/4 4G
G3/8 8G
SAE4 4T
SAE6 6T

Seals
Buna(Std.) N
Fluorocarbon V

Voltage
12 12VDC
24 24VDC
110 110VAC
220 220VAC

Connection
DL Double Leads
DH Electrial Outlet

Four Way Two Position(Spool-type)

BST10-241

Description of the process

When de-energized,the valve allows flow from ③ to ②,and ① to ④;

When energized,the valve allows flow between ③ to ④,as well as ② to ①.

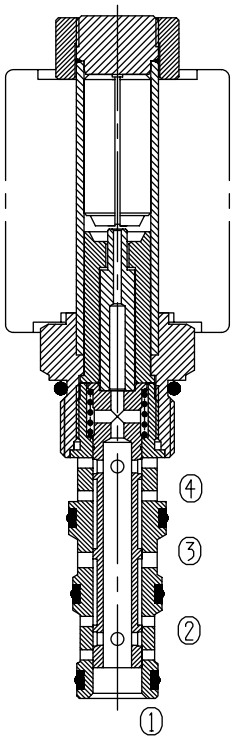

Specifications:

Max. Working Pressure	210bar
Flow Max.	See Performance
Operating Volt	<120ml/min at 210bar
Min Voltage Requires	12VDC、24VDC、110VAC、220VAC
Filtration Of Oil	85% of normal voltage
Type of Standard Cavity	20μm or better
Temperature	T5-3
Standard Block Model	-30~+100℃ Standard Buna Seals
	T5-31*/33*/34*/36*

Symbol:

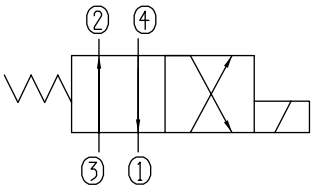

Characteristic:

32 cST Oil/40°C

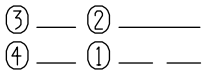

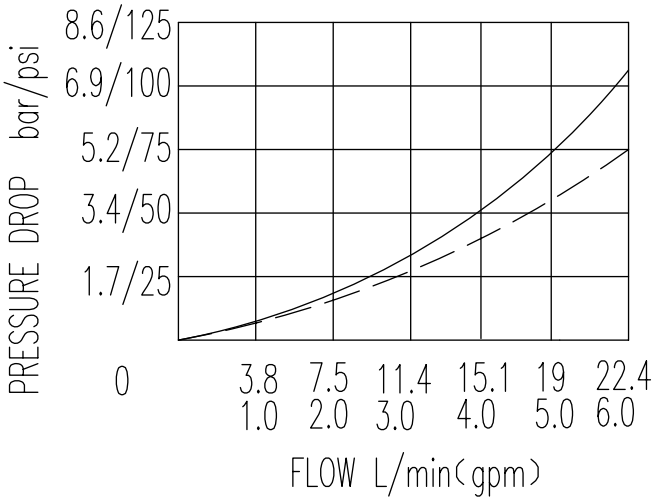

BST10-241 Profile dimensions

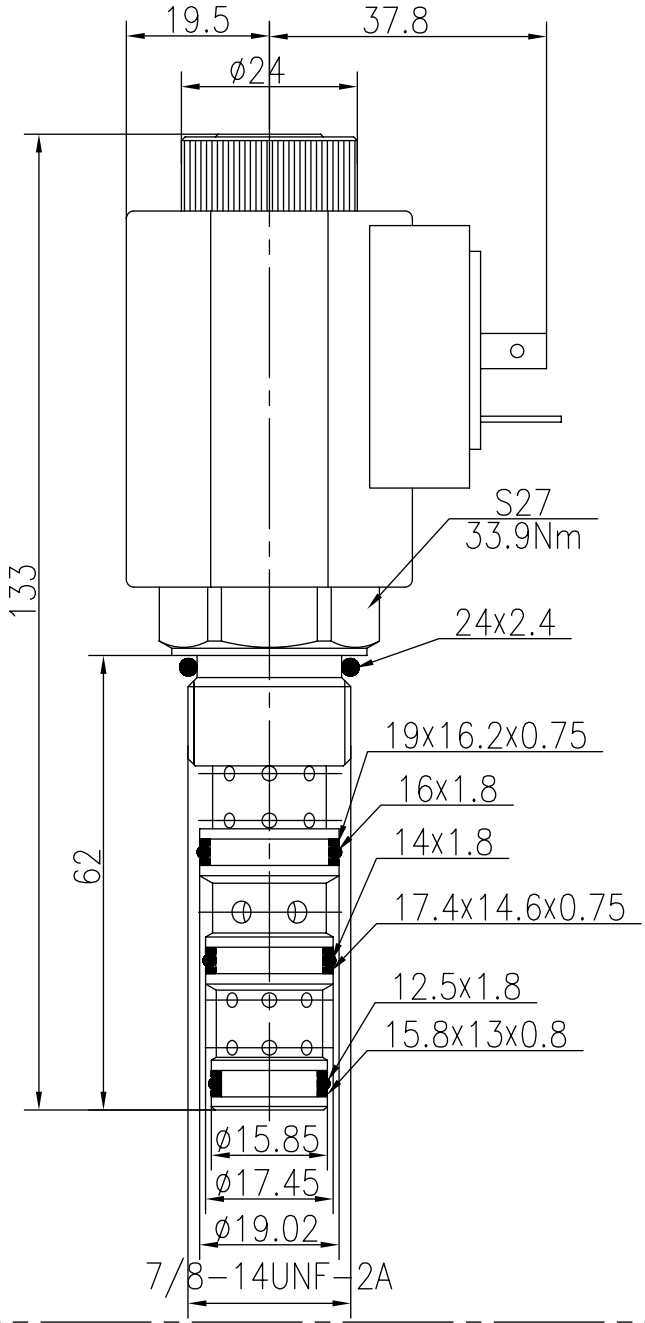

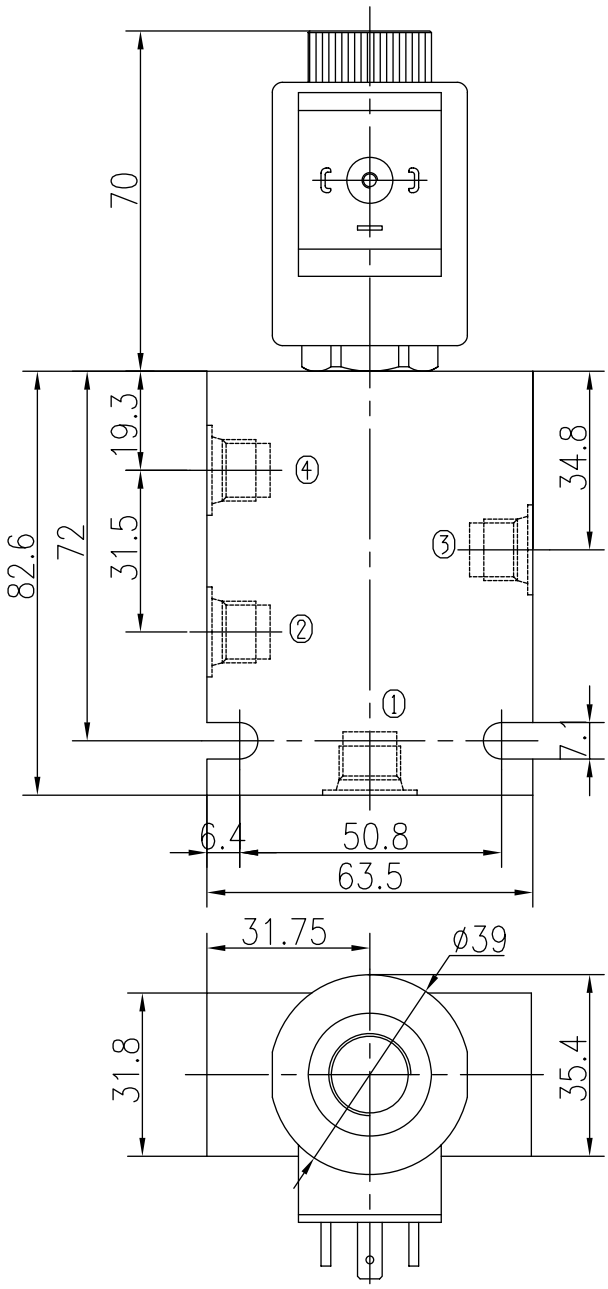

TO ORDER BST10-241 - - - - -

Solenoid Valve Function

Body Porting
Omit for Cartridge only

G1/4 4G
G3/8 8G
SAE4 4T
SAE6 6T

Seals
Buna(Std.) N
Fluorocarbon V

Voltage
12 12VDC
24 24VDC
110 110VAC
220 220VAC

Connection
DL Double Leads
DH Electrial Outlet

Four Way Two Position (Spool-type)

BST10-242

Description of the process

When de-energized,the valve allows flow from ③ to ④,and ② to ①;

When energized,the valve allows flow between ③ to ②,as well as ④ to ①.

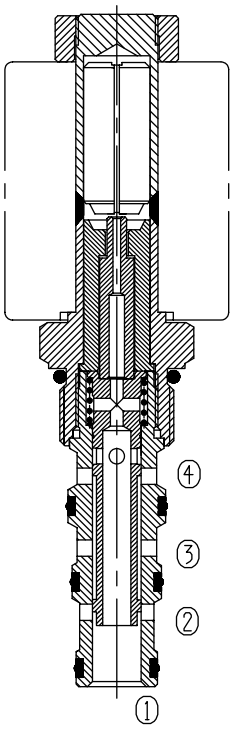

Specifications:

Max. Working Pressure	210bar
Flow Max.	See Performance
Operating Volt	<120ml/min at 210bar
Min Voltage Requires	12VDC、24VDC、110VAC、220VAC
Filtration Of Oil	85% of normal voltage
Type of Standard Cavity	20μm or better
Temperature	T5-3
Standard Block Model	-30~+100℃ Standard Buna Seals
	T5-31*/33*/34*/36*

Symbol:

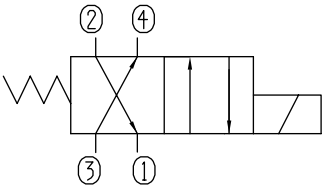

Characteristic:

32 cST Oil/40°C

③ — ② ——
④ — ① — —

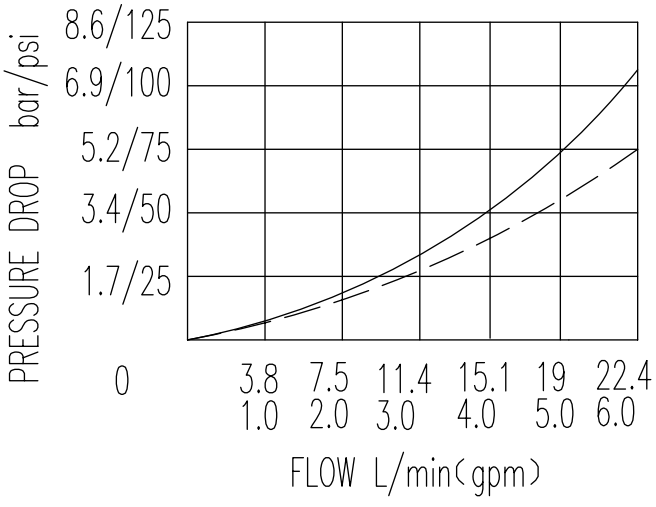

BST10-242 Profile dimensions

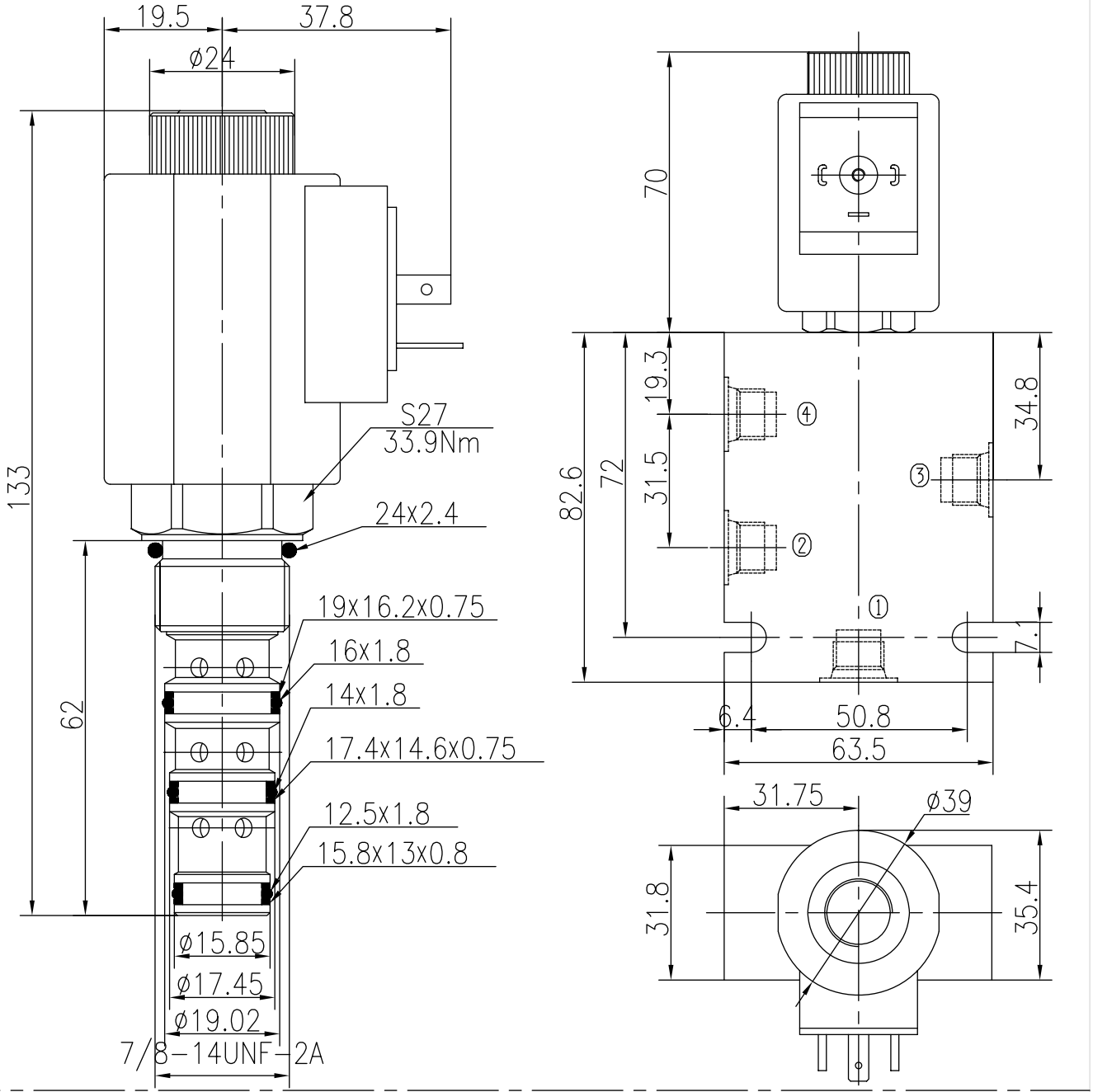

TO ORDER BST10 -242 - - - - -

Solenoid Valve Function

Body Porting
Omit for Cartridge only

G1/4 4G
G3/8 8G
SAE4 4T
SAE6 6T

Seals
Buna(Std.) N
Fluorocarbon V

Voltage
12 12VDC
24 24VDC
110 110VAC
220 220VAC

Connection
DL Double Leads
DH Electrial Outlet

Four Way Two Position(Spool-type)

BST10-243

Description of the process

When de-energized,the valve allows flow from ② to ①,and ③ to ④;

When energized,the valve blocks flow to all ports.

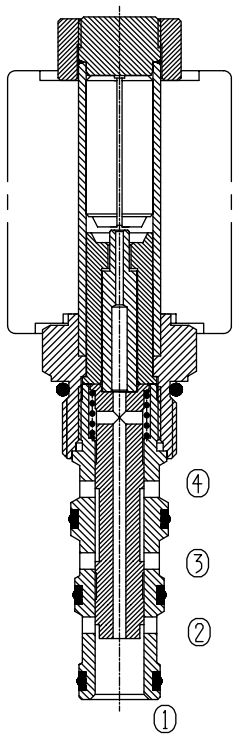

Specifications:

Max. Working Pressure	210bar
Flow Max.	See Performance
Operating Volt	<120ml/min at 210bar
Min Voltage Requires	12VDC、24VDC、110VAC、220VAC
Filtration Of Oil	85% of normal voltage
Type of Standard Cavity	20μm or better
Temperature	T5-3
Standard Block Model	-30~+100℃ Standard Buna Seals
	T5-31*/33*/34*/36*

Symbol:

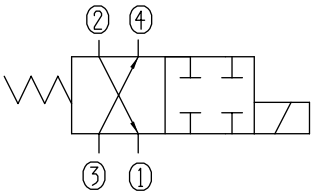

Characteristic:

32 cST Oil/40°C

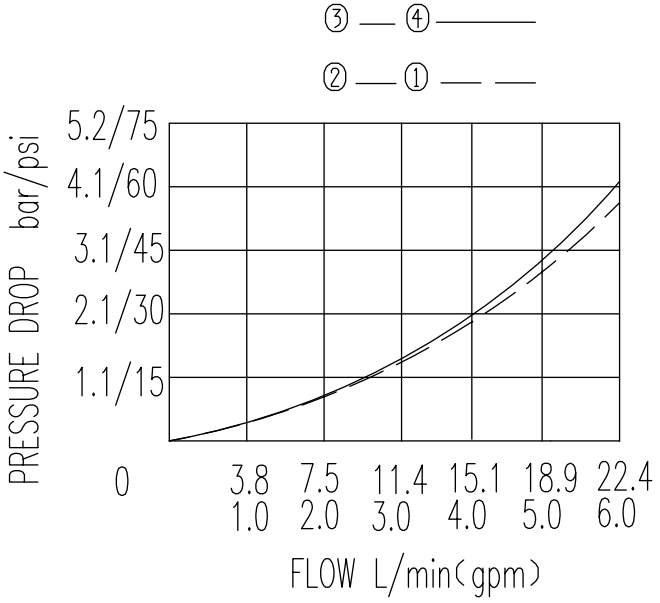

BST10-243 Profile dimensions

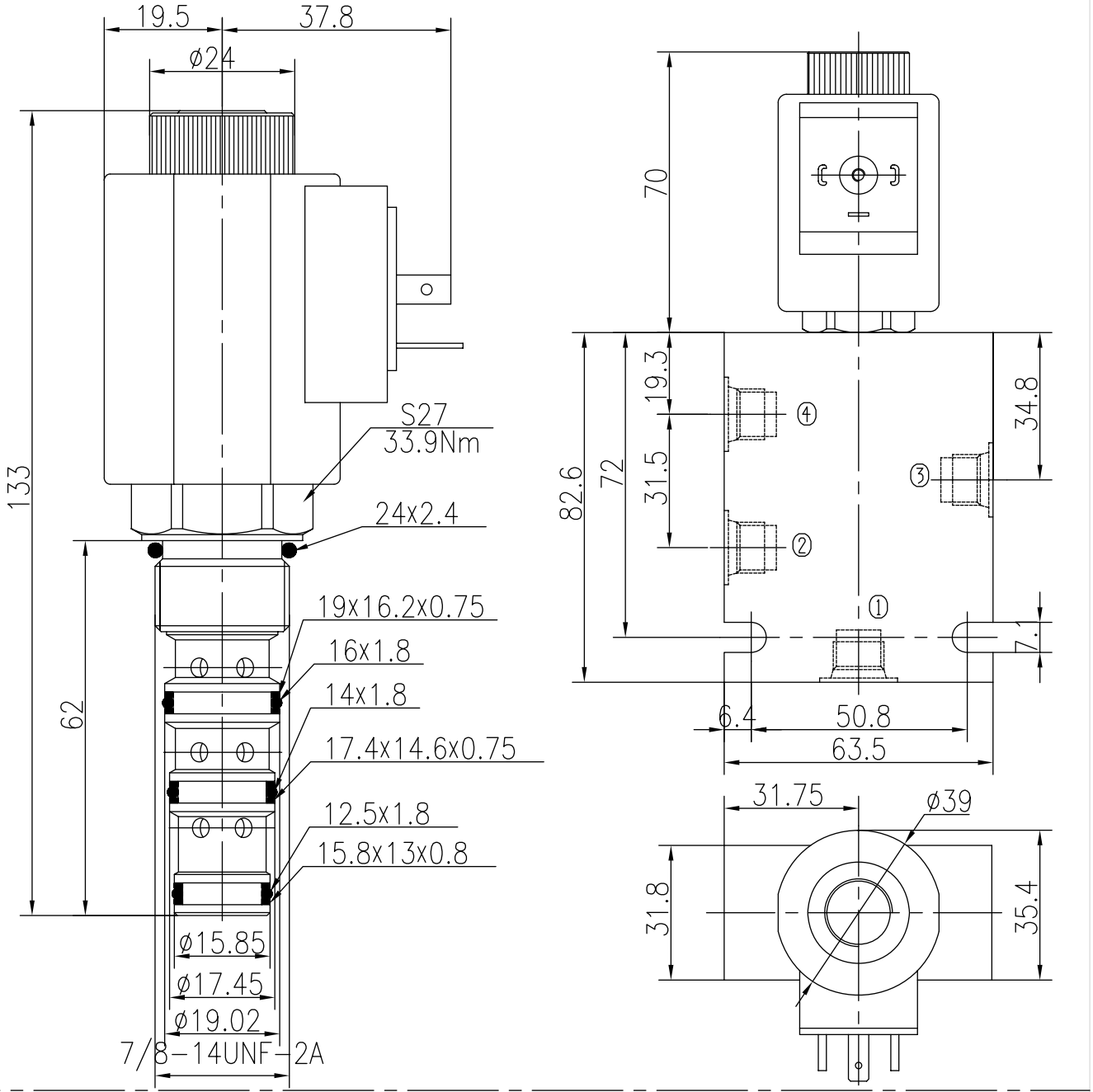

TO ORDER BST10-243 - - - - -

Solenoid Valve Function

Body Porting
Omit for Cartridge only

G1/4 4G
G3/8 8G
SAE4 4T
SAE6 6T

Seals
Buna(Std.) N
Fluorocarbon V

Voltage
12 12VDC
24 24VDC
110 110VAC
220 220VAC

Connection
DL Double Leads
DH Electrial Outlet

Four Way Two Position(Spool-type)

BST12-242

Description of the process

When de-energized,the valve allows flow from ③ to ④,and from ② to ①;
When energized,the valve allows flow from ③ to ②,and from ④ to ①.

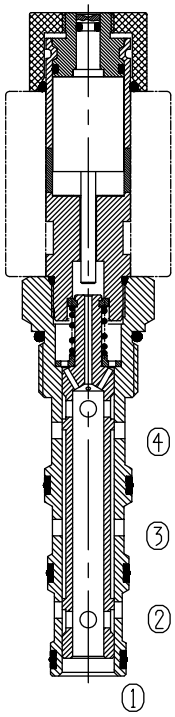

Specifications:

Max. Working Pressure	210bar
Flow Max.	See Performance
Operating Volt	<80ml/min at 210bar
Min Voltage Requires	12VDC、24VDC、110VAC、220VAC
Filtration Of Oil	85% of normal voltage
Type of Standard Cavity	20μm or better
Temperature	T6-3
Standard Block Model	-30~+100℃ Standard Buna Seals
	T6-31*/33*/34*/36*

Symbol:

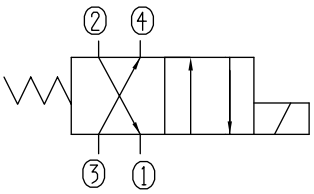

Characteristic: 32 cST Oil/40°C

② — ①
③ — ④

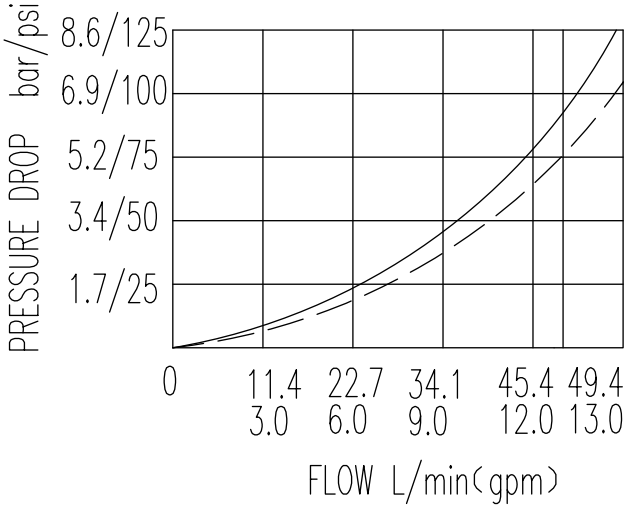

Four Way Two Position (Spool-type)

BST12-242 Profile dimensions

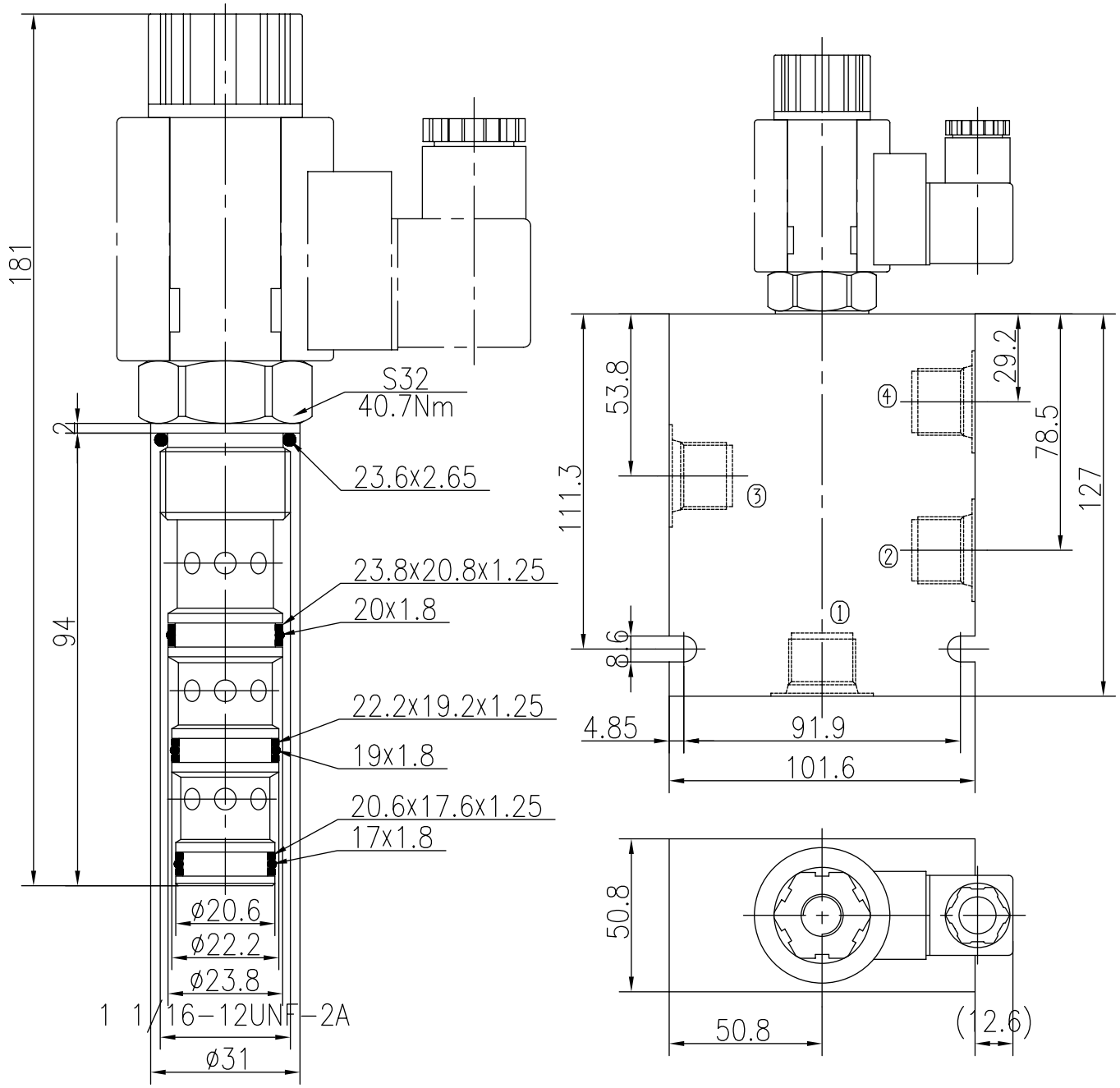

TO ORDER BST12 -242 – – – – –

Solenoid Valve Function

Body Porting
Omit for Cartridge only

G3/4 5G
G1 6G
SAE10 10T
SAE12 12T

Seals
Buna(Std.) N
Fluorocarbon V

Voltage
12 12VDC
24 24VDC

Connection
DL Double Leads
DH Electrial Outlet

Four Way Three Position(Spool-type)

BST08-340

Description of the process

When de-energized,the valve blocks flow to all ports;

When S1 is energized,the valve allows flow between ③ to ④,as well as ② to ①.

When S2 is energized,the valve allows flow between ③ to ②,as well as ④ to ①.

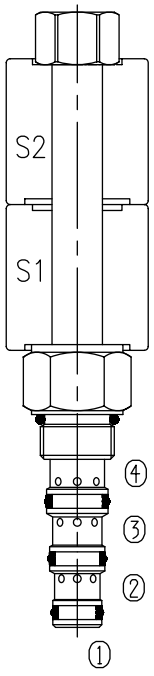

Specifications:

Max. Working Pressure	210bar
Flow Max.	See Performance
Operating Volt	<160ml/min at 210bar
Min Voltage Requires	12VDC、24VDC、110VAC、220VAC
Filtration Of Oil	85% of normal voltage
Type of Standard Cavity	20μm or better
Temperature	T4-3
Standard Block Model	-30~+100℃ Standard Buna Seals
	T4-31*/33*/34*/36*

Symbol:

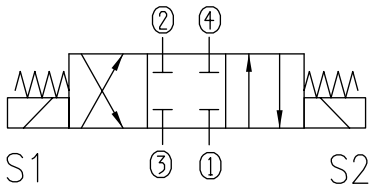

32 cST Oil/40° C

Characteristic:

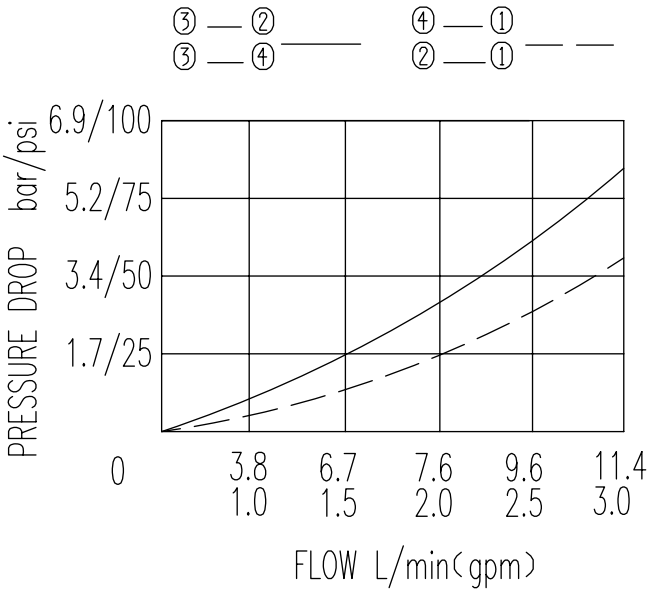

Four Way Three Position (Spool-type)

BST08-340 Profile dimensions

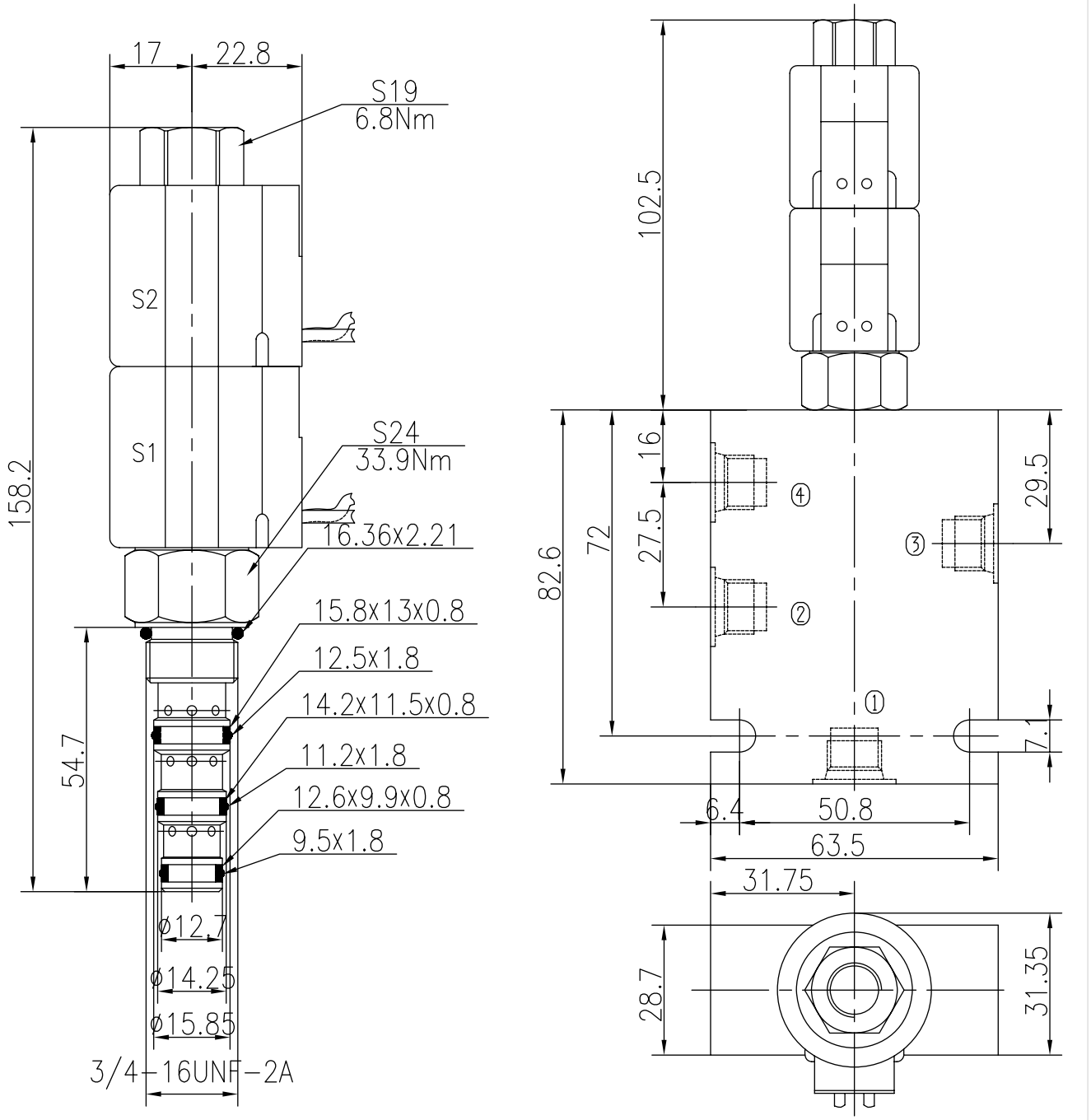

TO ORDER BST08 -340 - - - - -

Solenoid Valve Function

Body Porting
Omit for Cartridge only

G1/4 4G
G3/8 8G
SAE4 4T
SAE6 6T

Seals
Buna(Std.) N
Fluorocarbon V

Voltage
12 12VDC
24 24VDC
110 110VAC
220 220VAC

Connection
DL Double Leads
DH Electrial Outlet

Four Way Three Position(Spool-type)

BST08-34M

Description of the process

When de-energized,the valve blocks flow from ② to ④,while allows flow from ③ to ①;
When S1 is energized,the valve allows flow between ③ to ④,as well as ② to ①.
When S2 is energized,the valve allows flow between ③ to ②,as well as ④ to ①.

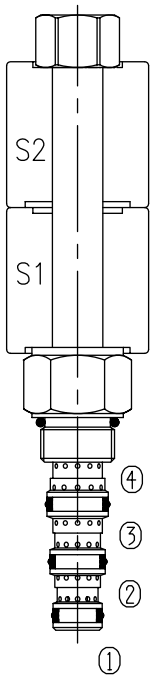

Specifications:

Max. Working Pressure	210bar
Flow Max.	See Performance
Operating Volt	<160ml/min at 210bar
Min Voltage Requires	12VDC、24VDC、110VAC、220VAC
Filtration Of Oil	85% of normal voltage
Type of Standard Cavity	20μm or better
Temperature	T4-3
Standard Block Model	-30~+100℃ Standard Buna Seals
	T4-31*/33*/34*/36*

Symbol:

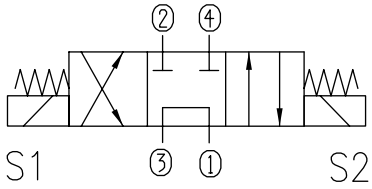

Characteristic: 32 cST Oil/40°C

③—② ④—① ③—①
③—④ ②—①

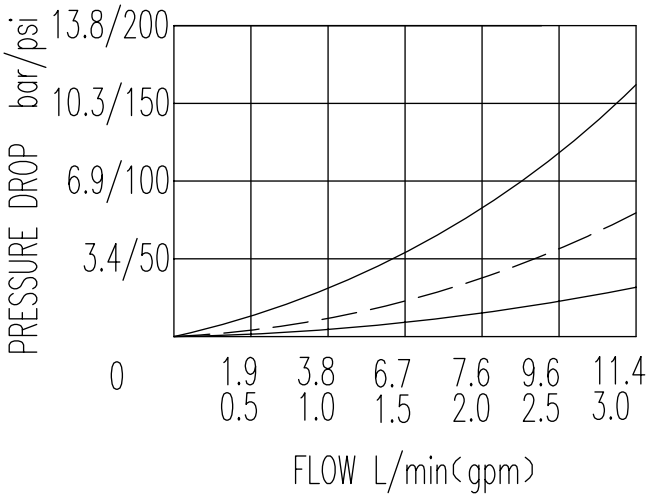

BST08-34M Profile dimensions

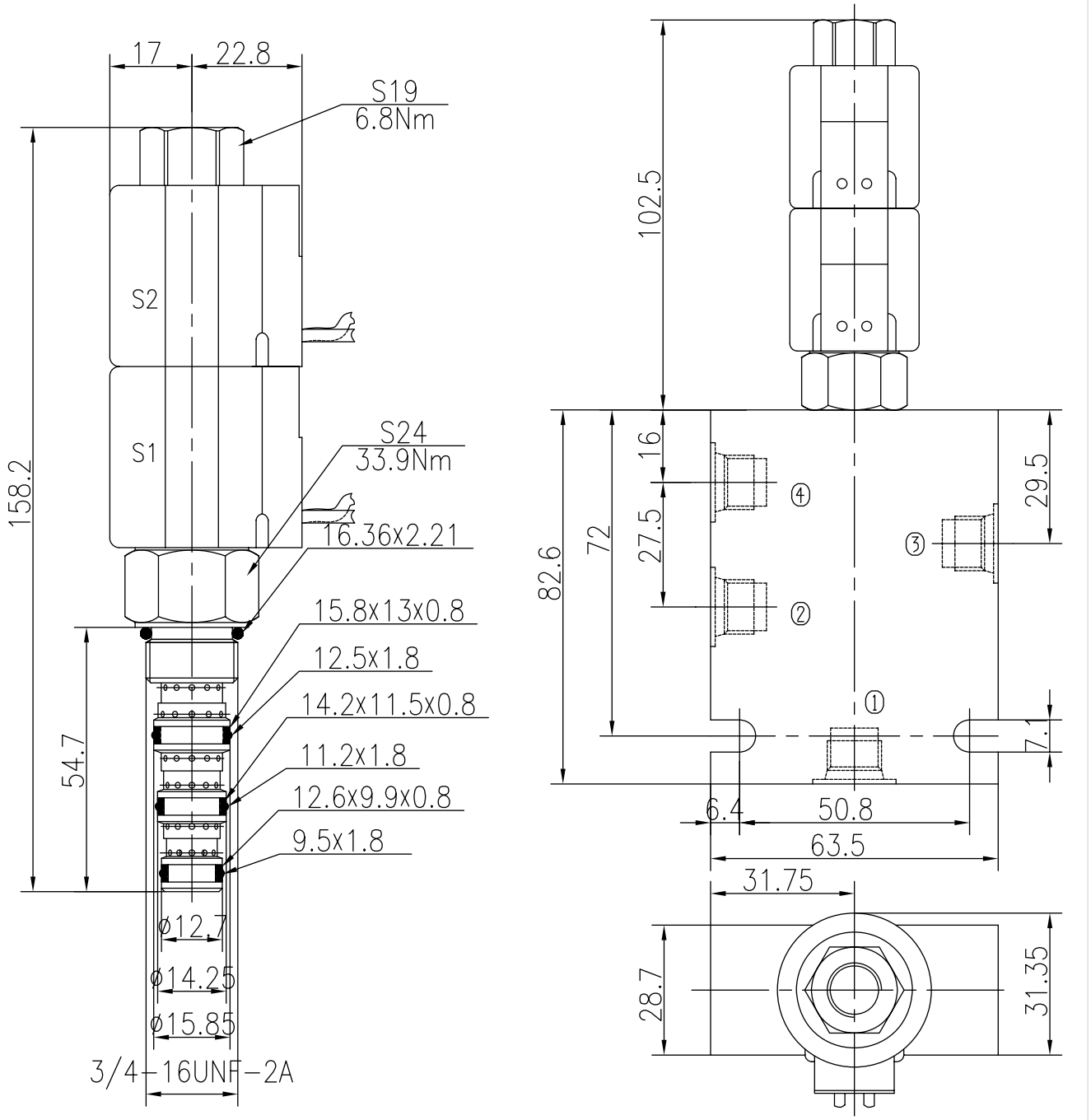

TO ORDER BST08 -34M - - - - -

Solenoid Valve Function

Body Porting
Omit for Cartridge only

G1/4 4G
G3/8 8G
SAE4 4T
SAE6 6T

Seals
Buna(Std.) N
Fluorocarbon V

Voltage
12 12VDC
24 24VDC
110 110VAC
220 220VAC

Connection
DL Double Leads
DH Electrial Outlet

Four Way Three Position(Spool-type)

BST08-34Y

Description of the process

When de-energized,the valve blocks flow to ③,while allows flow from ② to ① and from ④ to ①;

When S1 is energized,the valve allows flow between ③ to ④,as well as ② to ①.

When S2 is energized,the valve allows flow between ③ to ②,as well as ④ to ①.

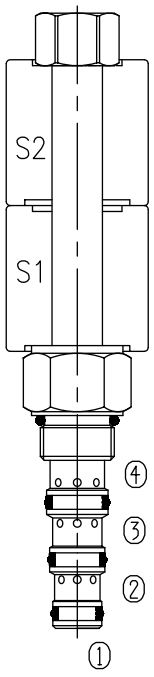

Specifications:

Max. Working Pressure	210bar
Flow Max.	See Performance
Operating Volt	<160ml/min at 210bar
Min Voltage Requires	12VDC、24VDC、110VAC、220VAC
Filtration Of Oil	85% of normal voltage
Type of Standard Cavity	20μm or better
Temperature	T4-3
Standard Block Model	-30~+100℃ Standard Buna Seals
	T4-31*/33*/34*/36*

Symbol:

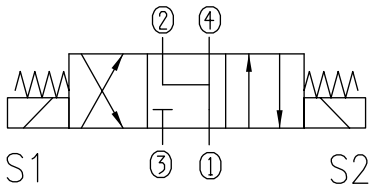

Characteristic:

32 cST Oil/40°C

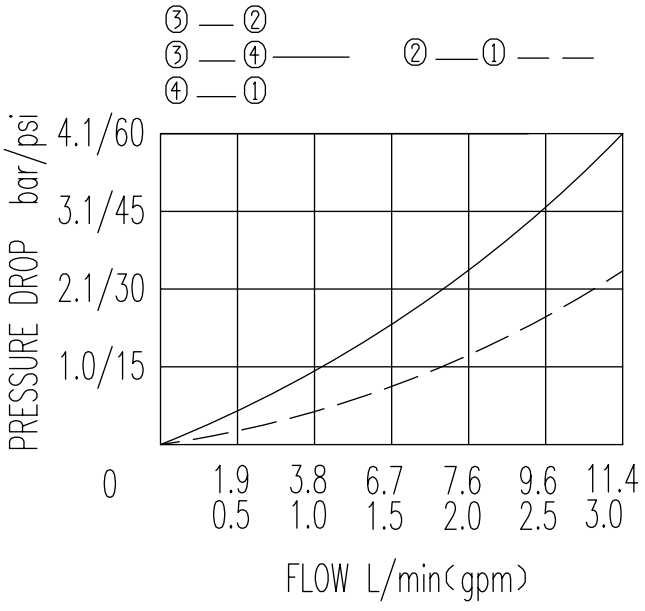

BST08-34Y

Profile dimensions

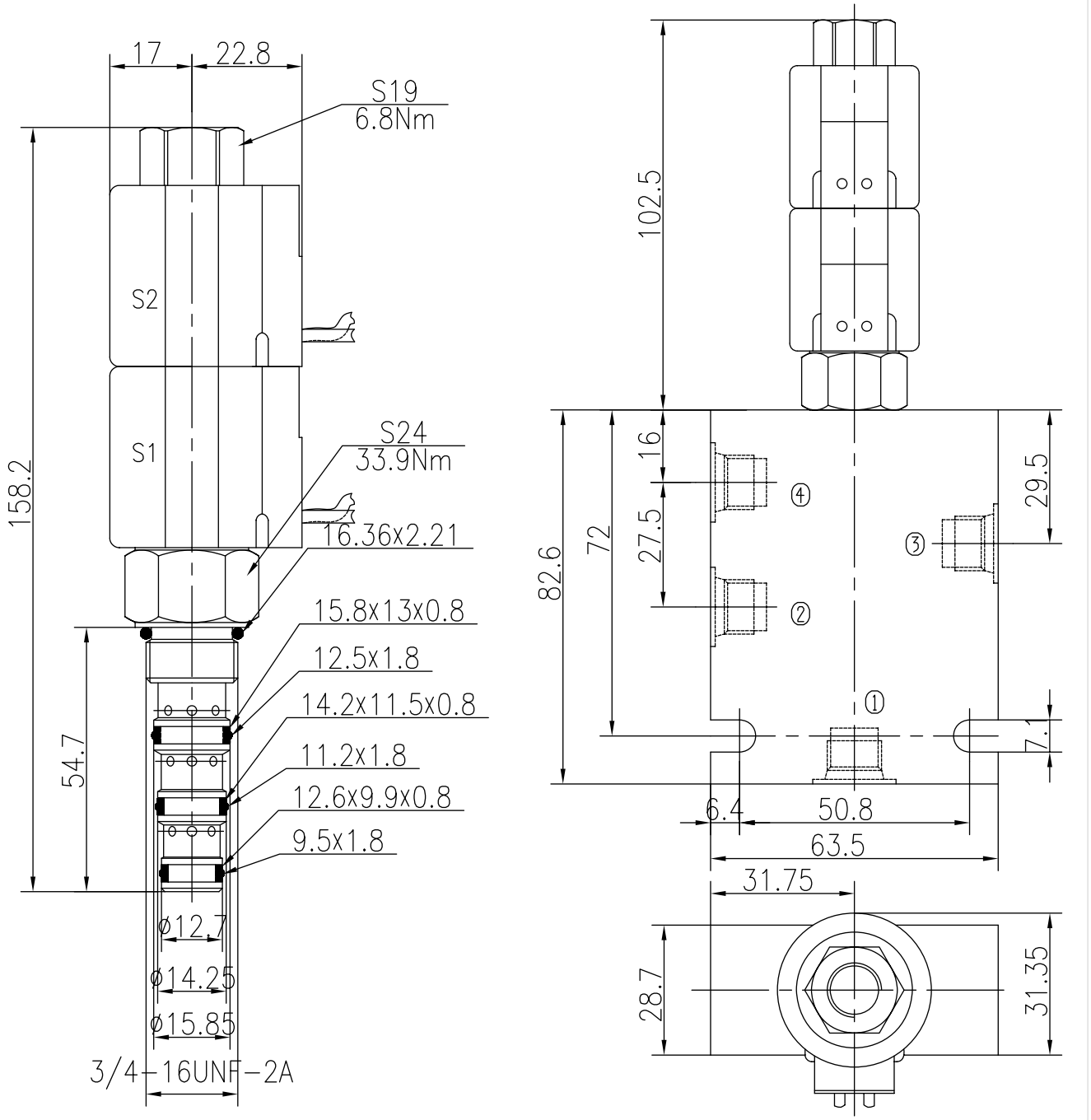

TO ORDER BST08-34Y - - - - -

Solenoid Valve Function

Body Porting
Omit for Cartridge only

G1/4 4G
G3/8 8G
SAE4 4T
SAE6 6T

Seals
Buna(Std.) N
Fluorocarbon V

Voltage
12 12VDC
24 24VDC
110 110VAC
220 220VAC

Connection
DL Double Leads
DH Electrial Outlet

Four Way Three Position(Spool-type)

BST08-34H

Description of the process

When de-energized,the valve allows flow to all ports;
When S1 is energized,the valve allows flow between ③ to ④,as well as ② to ①.
When S2 is energized,the valve allows flow between ③ to ②,as well as ④ to ①.

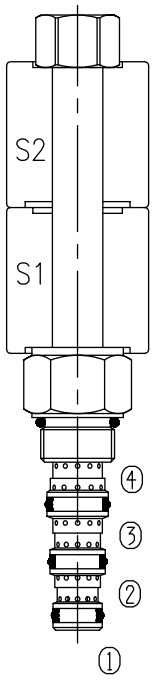

Specifications:

Max. Working Pressure	210bar
Internal Leakage	See Performance
Operating Volt	<160ml/min at 210bar
Min Voltage Requires	12VDC、24VDC、110VAC、220VAC
Filtration Of Oil	85% of normal voltage
Type of Standard Cavity	20μm or better
Temperature	T4-3
Standard Block Model	-30~+100℃ Standard Buna Seals
	T4-31*/33*/34*/36*

Symbol:

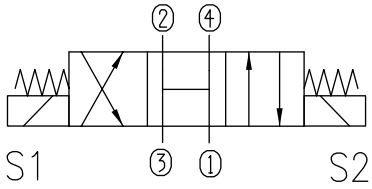

Characteristic:

32 cST Oil/40°C

④— ①
③— ②
③— ④

②— ①
③— ①

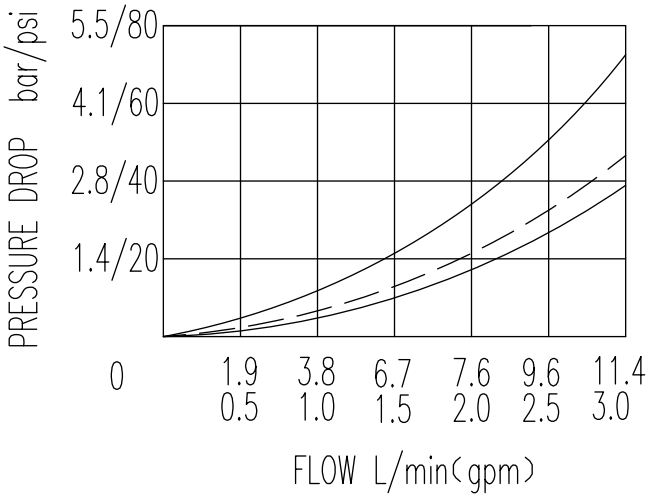

BST08-34H

Profile dimensions

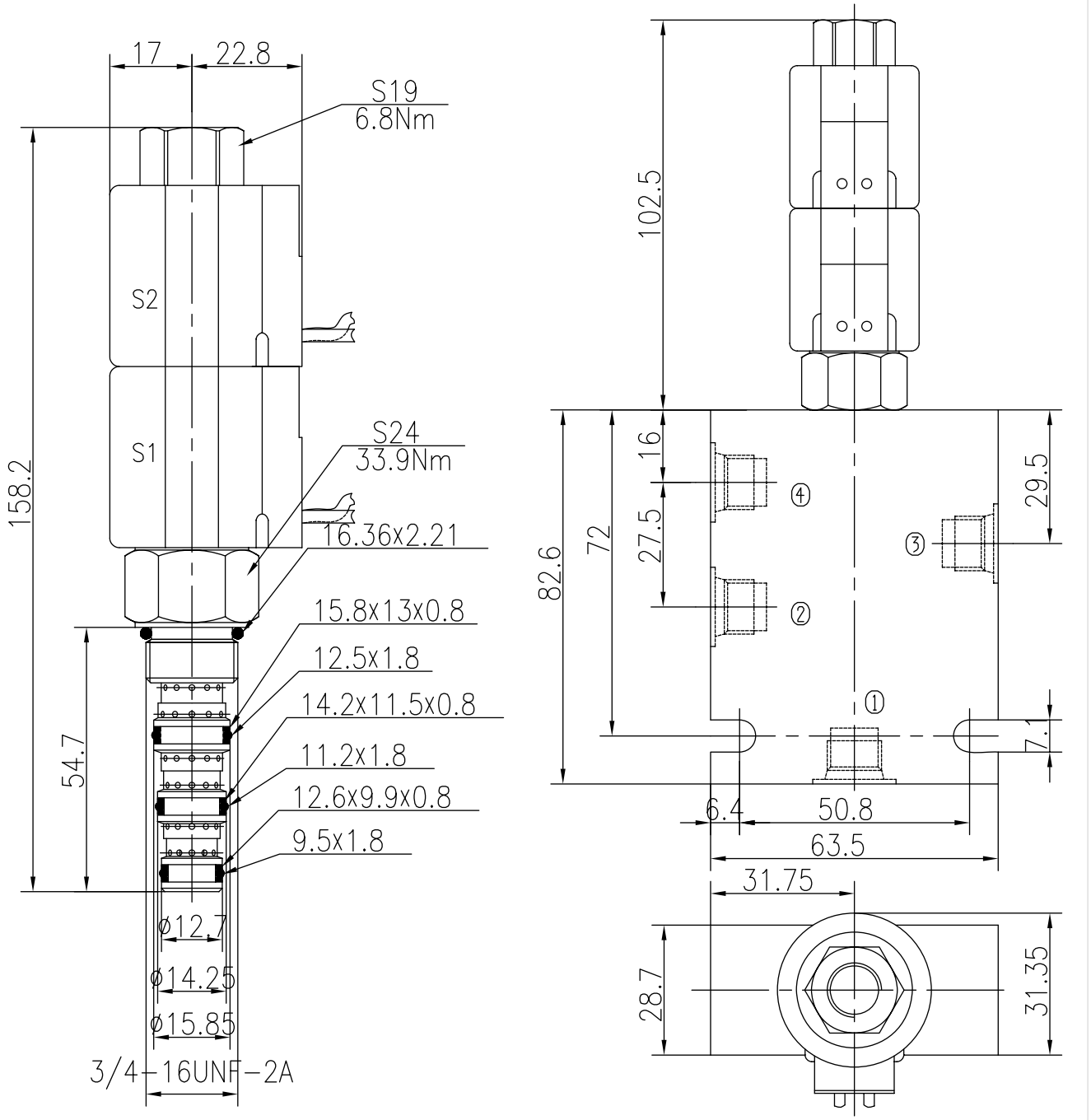

TO ORDER BST08 -34H - - - - -

Solenoid Valve Function

Body Porting
Omit for Cartridge only

G1/4 4G
G3/8 8G
SAE4 4T
SAE6 6T

Seals
Buna(Std.) N
Fluorocarbon V

Voltage
12 12VDC
24 24VDC
110 110VAC
220 220VAC

Connection
DL Double Leads
DH Electrial Outlet

Four Way Three Position(Spool-type)

BST10-340

Description of the process

When de-energized,the valve blocks flow to all ports;

When S1 is energized,the valve allows flow between ③ to ④,as well as ② to ①.

When S2 is energized,the valve allows flow between ③ to ②,as well as ④ to ①.

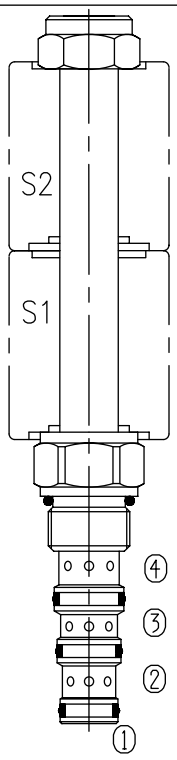

Specifications:

Max. Working Pressure	210bar
Internal Leakage	See Performance
Operating Volt	<300ml/min at 210bar
Min Voltage Requires	12VDC、24VDC、110VAC、220VAC
Filtration Of Oil	85% of normal voltage
Type of Standard Cavity	20μm or better
Temperature	T5-3
Standard Block Model	-30~+100℃ Standard Buna Seals
	T5-31*/33*/34*/36*

Symbol:

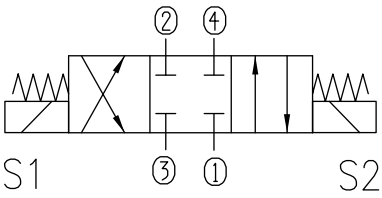

Characteristic:

32 cST Oil/40°C

③—④ ④—①
③—② ②—①

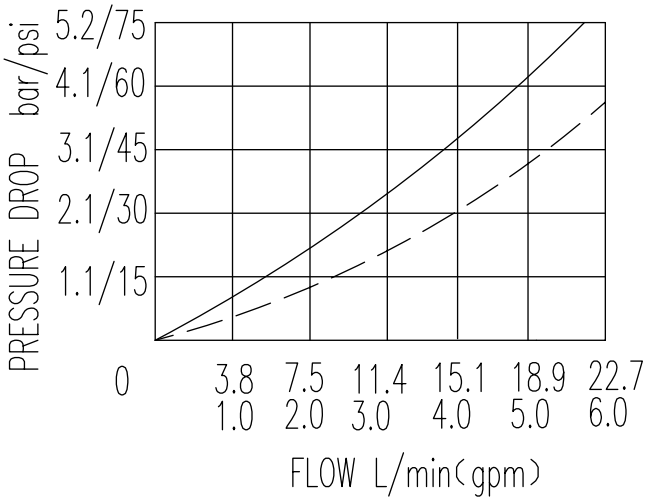

BST10-340 Profile dimensions

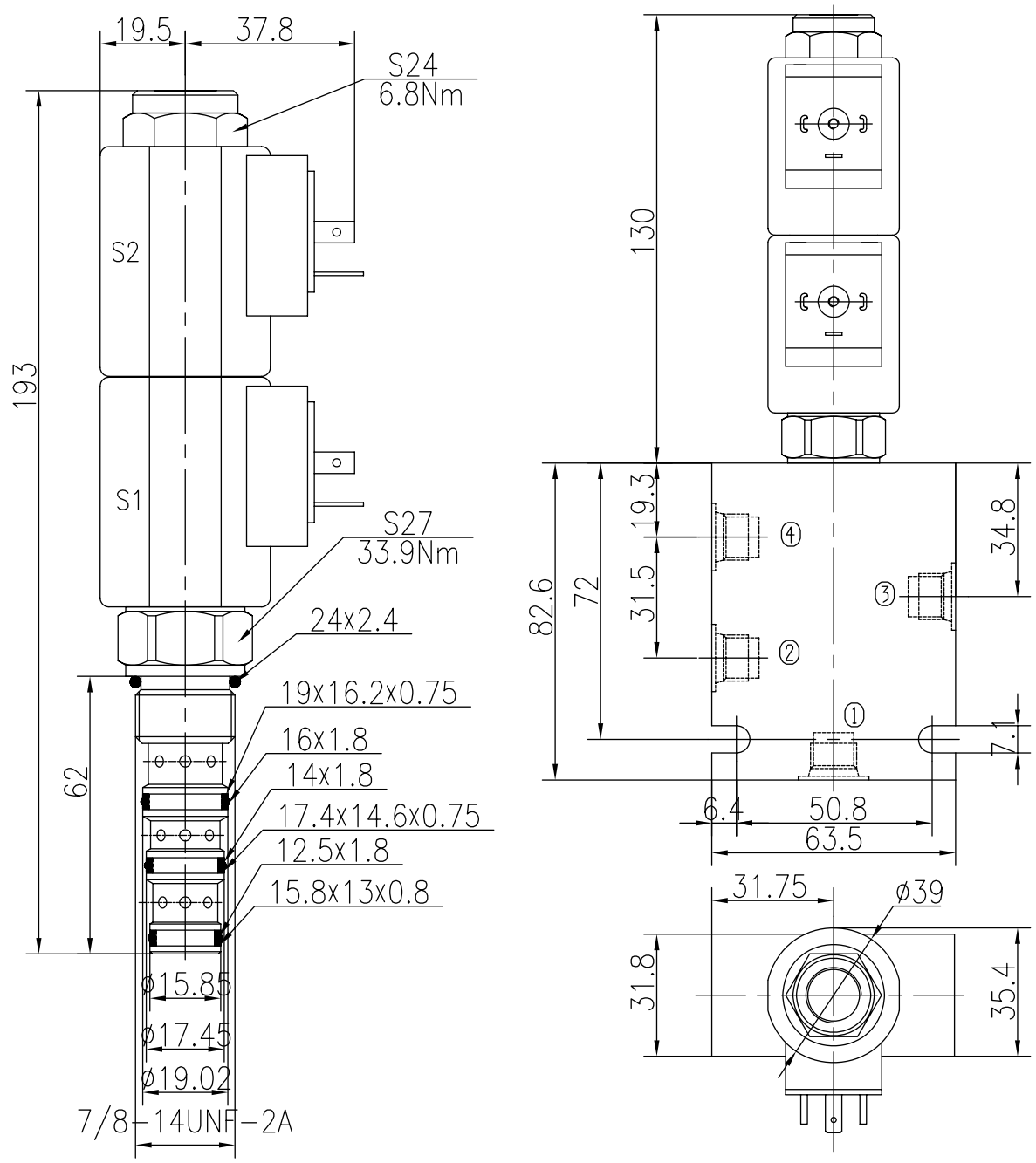

TO ORDER BST10-340 - - - - -

Solenoid Valve Function

Body Porting
Omit for Cartridge only

G1/4 4G
G3/8 8G
SAE4 4T
SAE6 6T

Seals
Buna(Std.) N
Fluorocarbon V

Voltage
12 12VDC
24 24VDC
110 110VAC
220 220VAC

Connection
DL Double Leads
DH Electrial Outlet

Four Way Three Position(Spool-type)

BST10-34Y

Description of the process

When de-energized,the valve blocks flow to ③,while allows flow from ② to ① and from ④ to ①;

When S1 is energized,the valve allows flow between ③ to ④,as well as ② to ①.

When S2 is energized,the valve allows flow between ③ to ②,as well as ④ to ①.

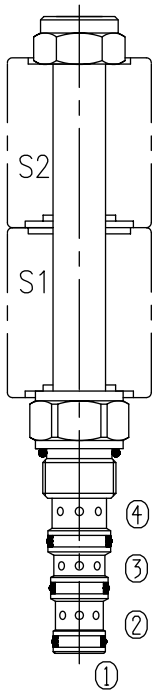

Specifications:

	210bar
Max. Working Pressure	See Performance
Internal Leakage	<300ml/min at 210bar
Operating Volt	12VDC、24VDC、110VAC、220VAC
Min Voltage Requires	85% of normal voltage
Filtration Of Oil	20μm or better
Type of Standard Cavity	T5-3
Temperature	-30~+100℃ Standard Buna Seals
Standard Block Model	T5-31*/33*/34*/36*

Symbol:

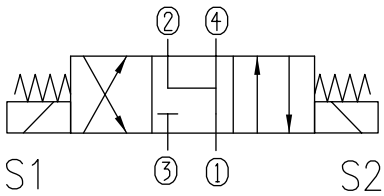

Characteristic: 32 cST Oil/40°C

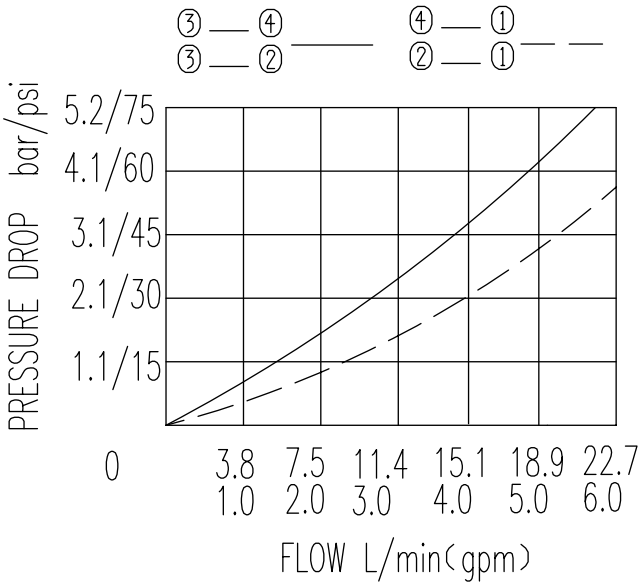

BST10-34Y Profile dimensions

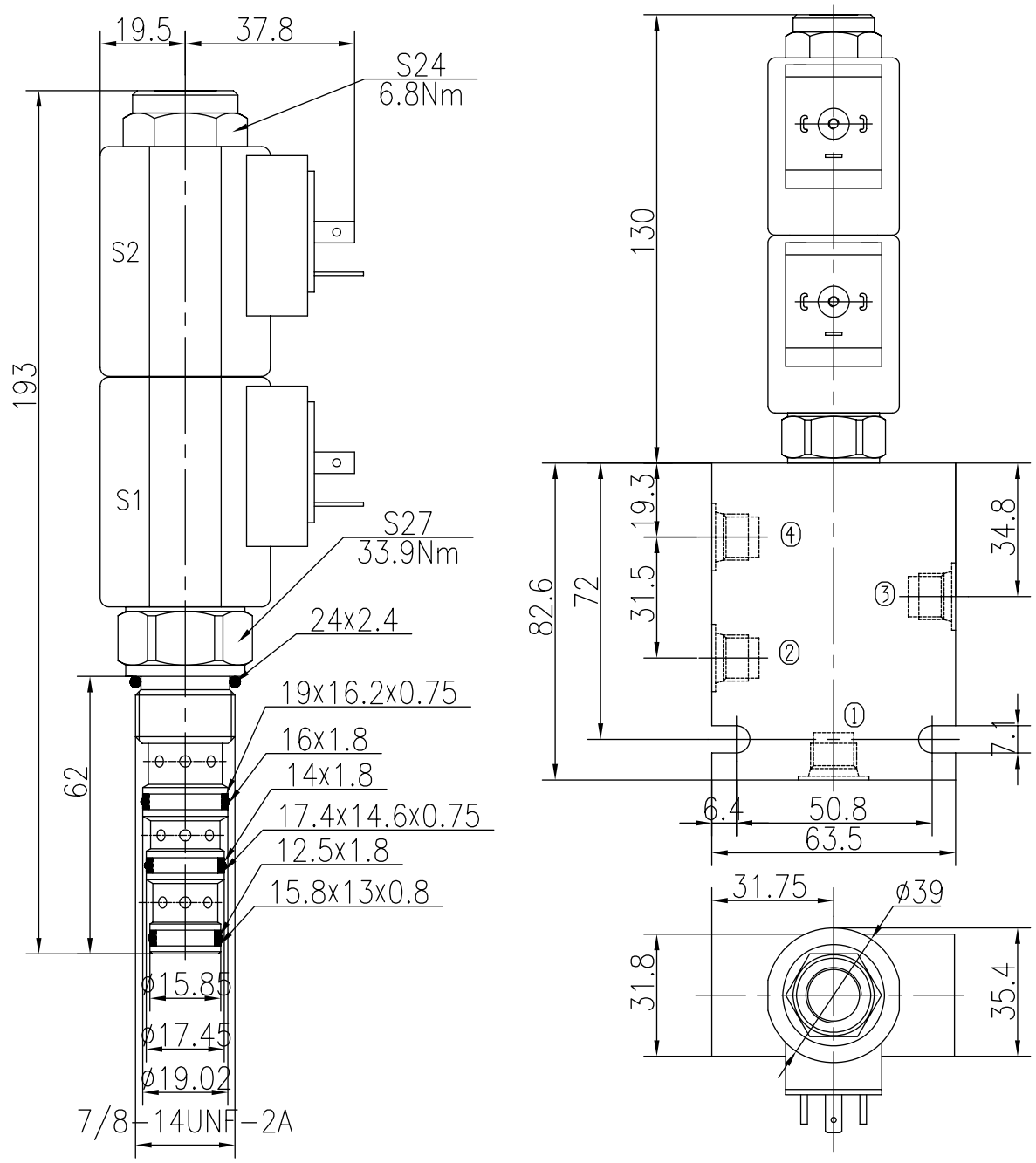

TO ORDER BST10-34Y - - - - -

Solenoid Valve Function

Body Porting
Omit for Cartridge only

G1/4 4G
G3/8 8G
SAE4 4T
SAE6 6T

Seals
Buna(Std.) N
Fluorocarbon V

Voltage
12 12VDC
24 24VDC
110 110VAC
220 220VAC

Connection
DL Double Leads
DH Electrial Outlet

Four Way Three Position(Spool-type)

BST10-34M

Description of the process

When de-energized,the valve blocks flow from ② to ④,while allows flow from ③ to ①;

When S1 is energized,the valve allows flow between ③ to ④,as well as ② to ①.

When S2 is energized,the valve allows flow between ③ to ②,as well as ④ to ①.

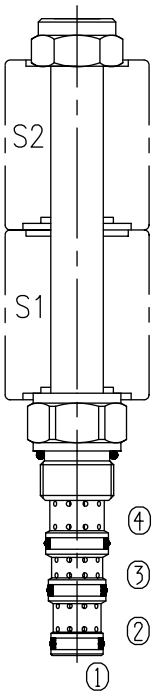

Specifications:

	210bar
Max. Working Pressure	See Performance
Flow Max.	<300ml/min at 210bar
Operating Volt	12VDC、24VDC、110VAC、220VAC
Min Voltage Requires	85% of normal voltage
Filtration Of Oil	20μm or better
Type of Standard Cavity	T5-3
Temperature	-30~+100℃ Standard Buna Seals
Standard Block Model	T5-31*/33*/34*/36*

Symbol:

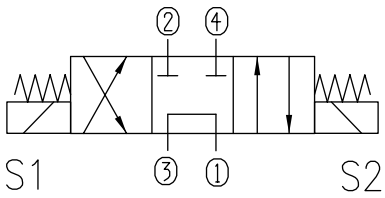

Characteristic:

32 cST Oil/40°C

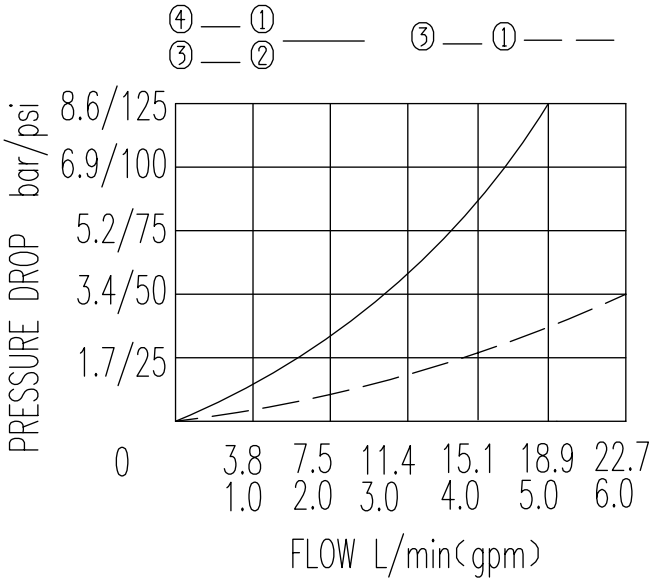

BST10-34M

Profile dimensions

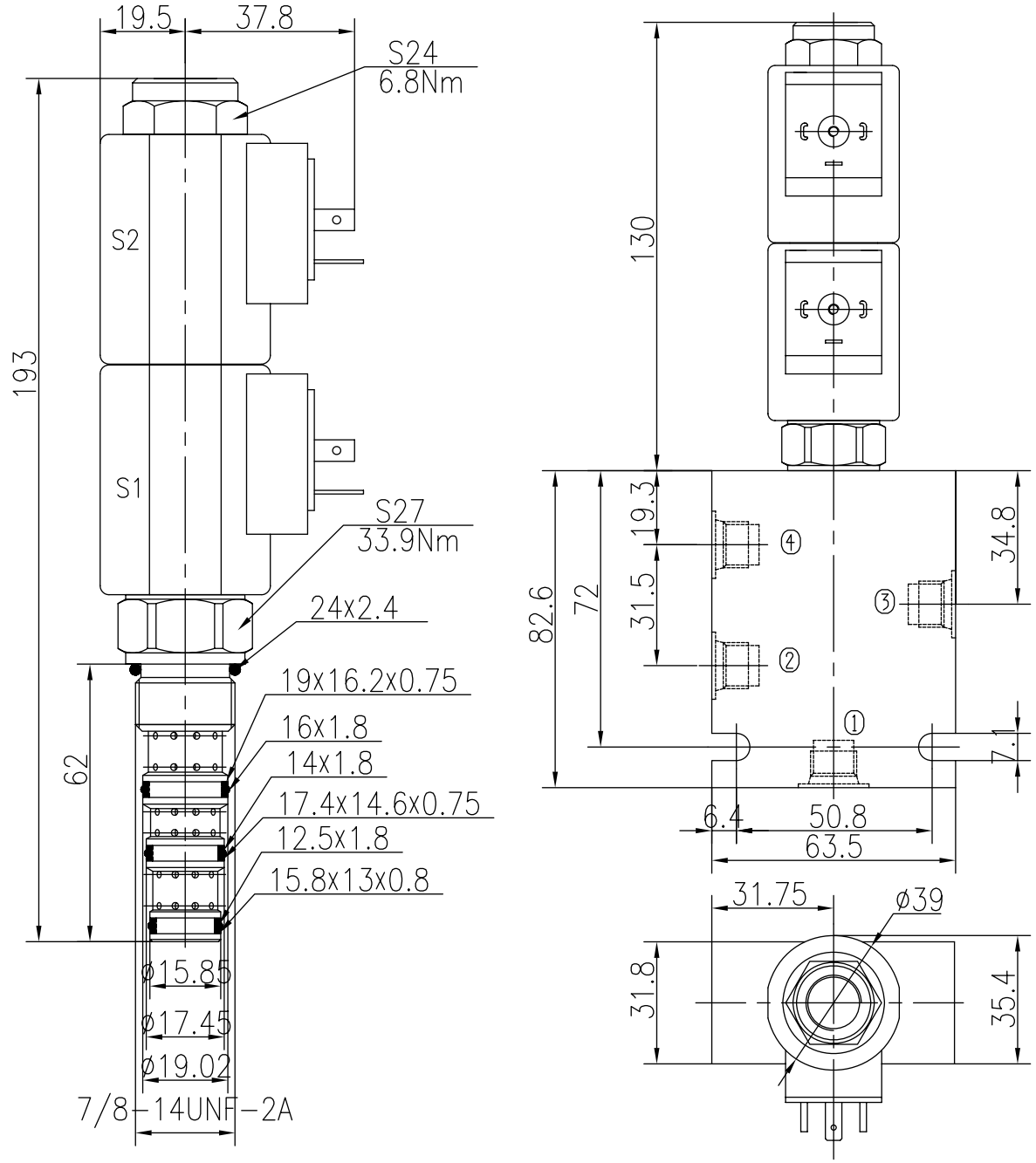

TO ORDER BST10 -34M - - - -

Solenoid Valve Function

Body Porting
Omit for Cartridge only

G1/4 4G
G3/8 8G
SAE4 4T
SAE6 6T

Seals
Buna(Std.) N
Fluorocarbon V

Voltage
12 12VDC
24 24VDC
110 110VAC
220 220VAC

Connection
DL Double Leads
DH Electrial Outlet

Four Way Three Position(Spool-type)

BST10-34H

Description of the process

When de-energized,the valve allows flow to all ports;
When S1 is energized,the valve allows flow between ③ to ④,as well as ② to ①.
When S2 is energized,the valve allows flow between ③ to ②,as well as ④ to ①.

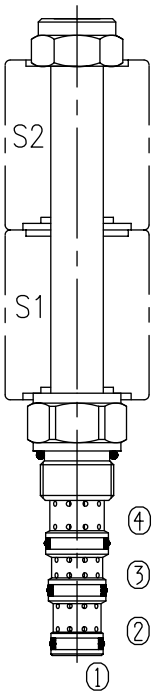

Specifications: 210bar

Max. Working Pressure	See Performance
Flow Max.	<300ml/min at 210bar
Operating Volt	12VDC、24VDC、110VAC、220VAC
Min Voltage Requires	85% of normal voltage
Filtration Of Oil	20μm or better
Type of Standard Cavity	T5-3
Temperature	-30~+100℃ Standard Buna Seals
Standard Block Model	T5-31*/33*/34*/36*

Symbol:

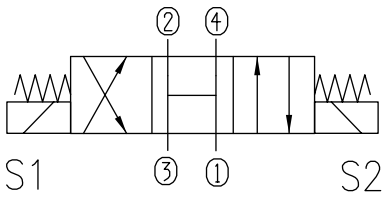

Characteristic: 32 cST Oil/40°C

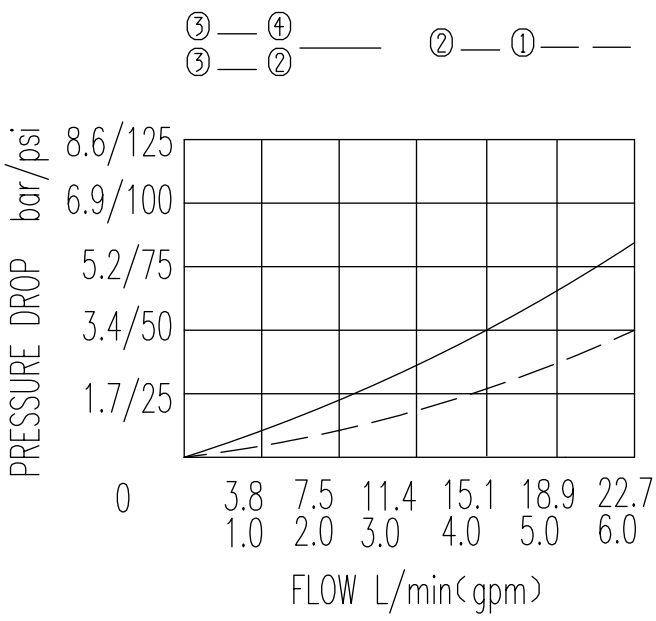

BST10-34H Profile dimensions

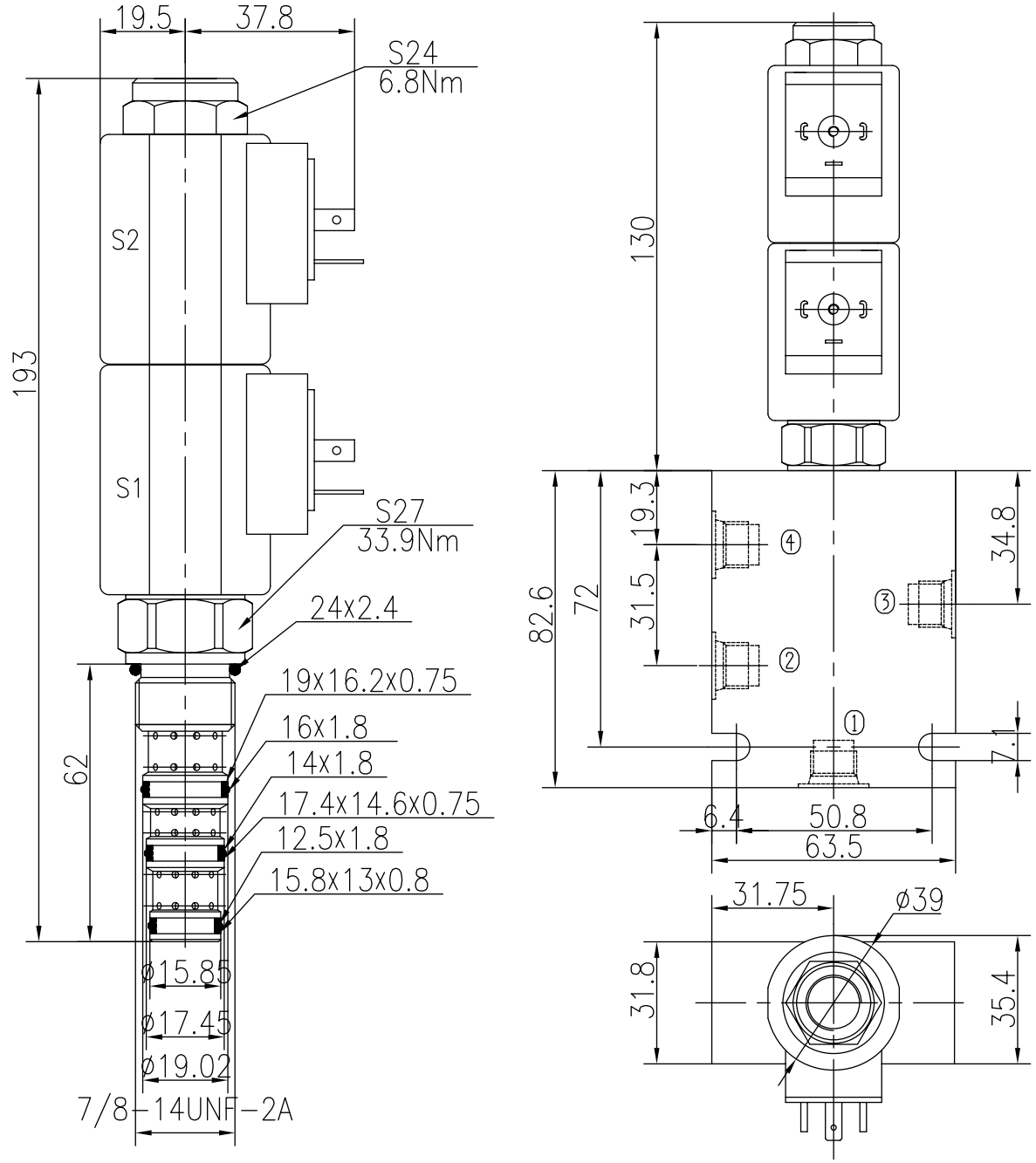

TO ORDER BST10 -34H - - - -

Solenoid Valve Function

Body Porting (Omit for Cartridge only)

G1/4	4G
G3/8	8G
SAE4	4T
SAE6	6T

Seals

Buna(Std.)	N
Fluorocarbon	V

Voltage

12	12VDC
24	24VDC
110	110VAC
220	220VAC

Connection

DL	Double Leads
DH	Electrial Outlet

Standard Ported Body

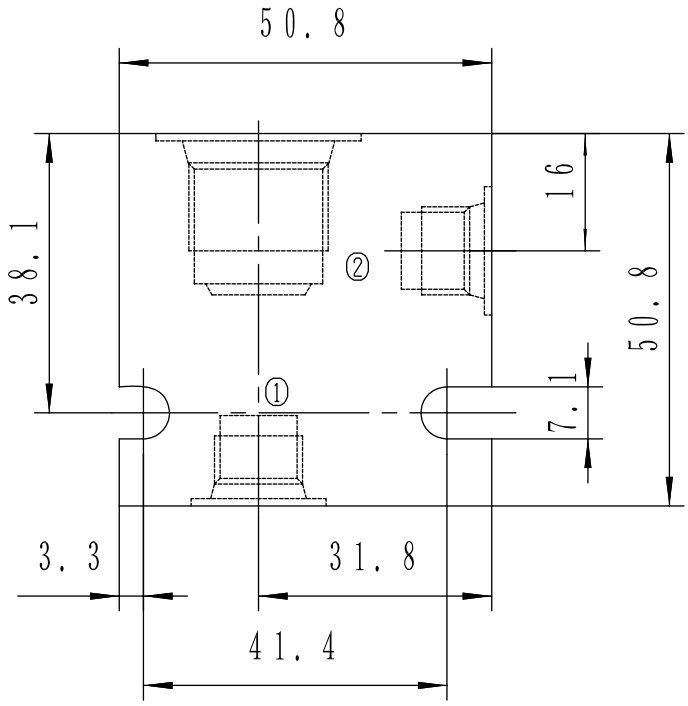

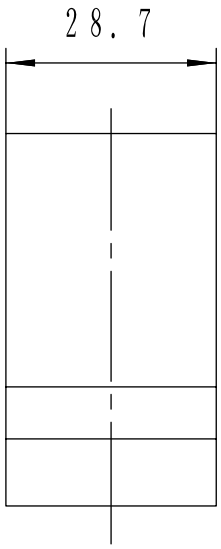

Valve block model	Oil mouth size	Valve material
T4-11A	G1/4	45
T4-11B	G1/4	Lc4
T4-13A	G3/8	45
T4-13B	G3/8	Lc4
T4-14A	SAE4	45
T4-14B	SAE4	Lc4
T4-16A	SAE6	45
T4-16B	SAE6	Lc4

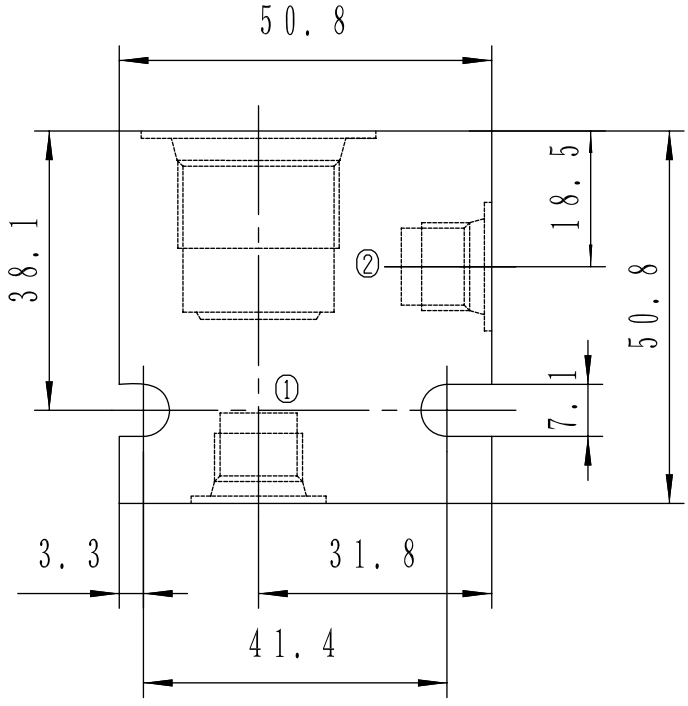

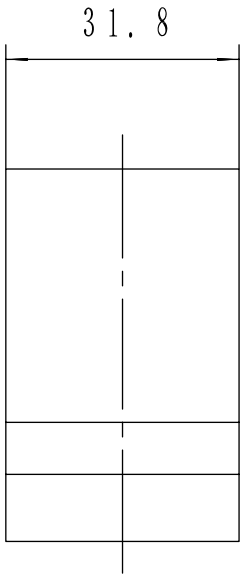

Valve block model	Oil mouth size	Valve material
T5-11A	G1/4	45
T5-11B	G1/4	Lc4
T5-13A	G3/8	45
T5-13B	G3/8	Lc4
T5-14A	SAE4	45
T5-14B	SAE4	Lc4
T5-16A	SAE6	45
T5-16B	SAE6	Lc4

Standard Ported Body

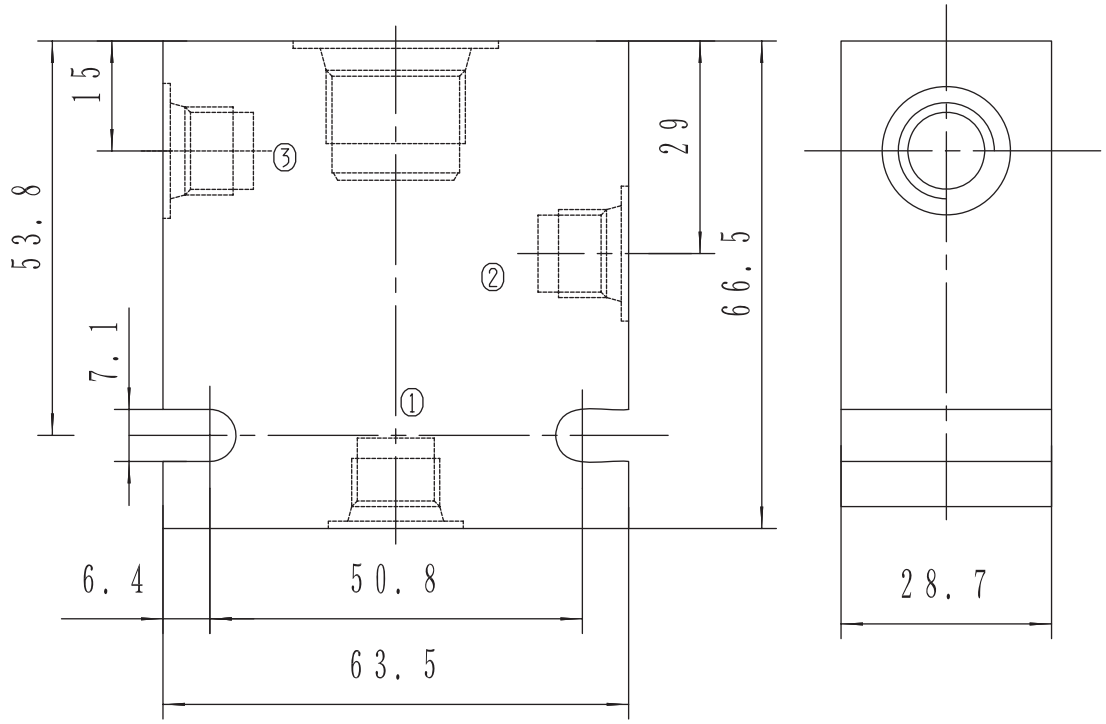

Valve block model	Oil mouth size	Valve material
T4-21A	G1/4	45
T4-21B	G1/4	Lc4
T4-23A	G3/8	45
T4-23B	G3/8	Lc4
T4-24A	SAE4	45
T4-24B	SAE4	Lc4
T4-26A	SAE6	45
T4-26B	SAE6	Lc4

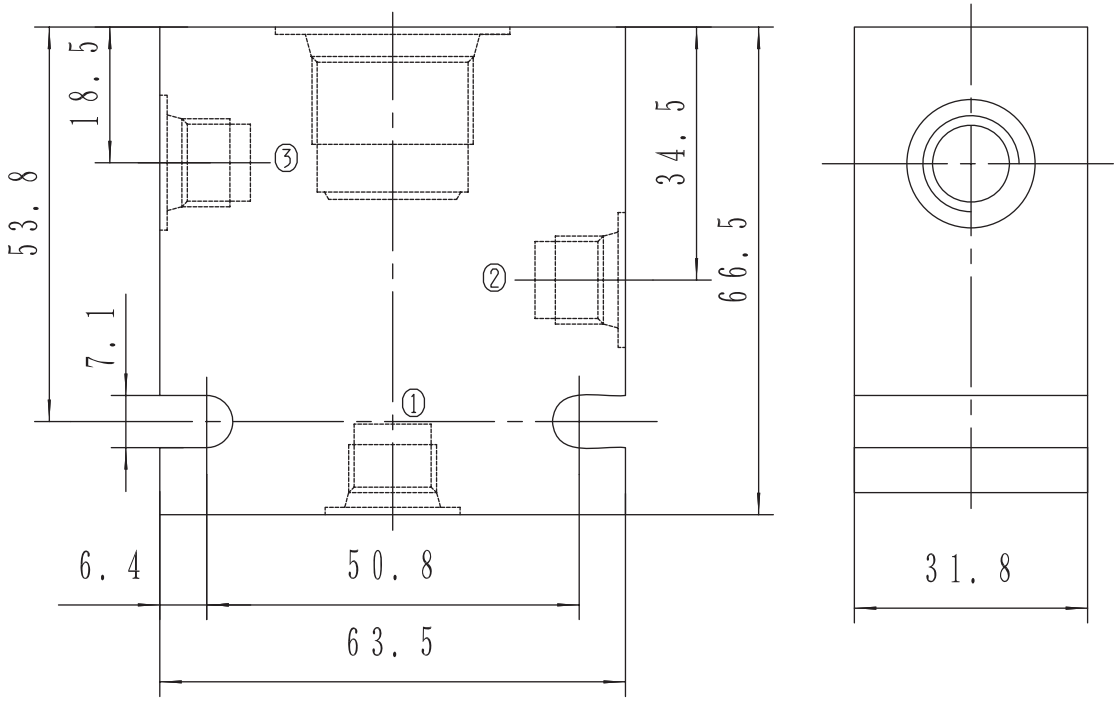

Valve block model	Oil mouth size	Valve material
T5-21A	G1/4	45
T5-21B	G1/4	Lc4
T5-23A	G3/8	45
T5-23B	G3/8	Lc4
T5-24A	SAE4	45
T5-24B	SAE4	Lc4
T5-26A	SAE6	45
T5-26B	SAE6	Lc4

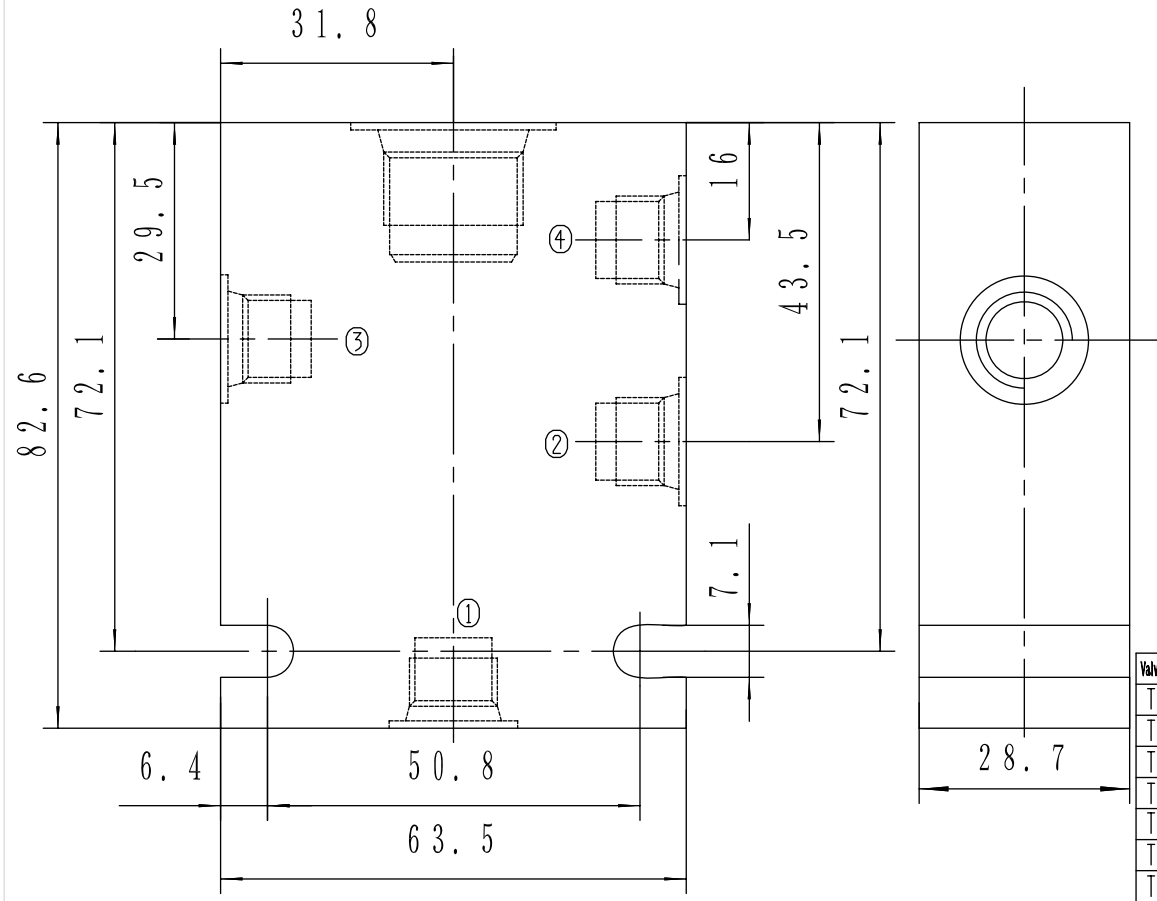

Valve block model	Oil mouth size	Valve material
T4-31A	G1/4	45
T4-31B	G1/4	Lc4
T4-33A	G3/8	45
T4-33B	G3/8	Lc4
T4-34A	SAE4	45
T4-34B	SAE4	Lc4
T4-36A	SAE6	45
T4-36B	SAE6	Lc4

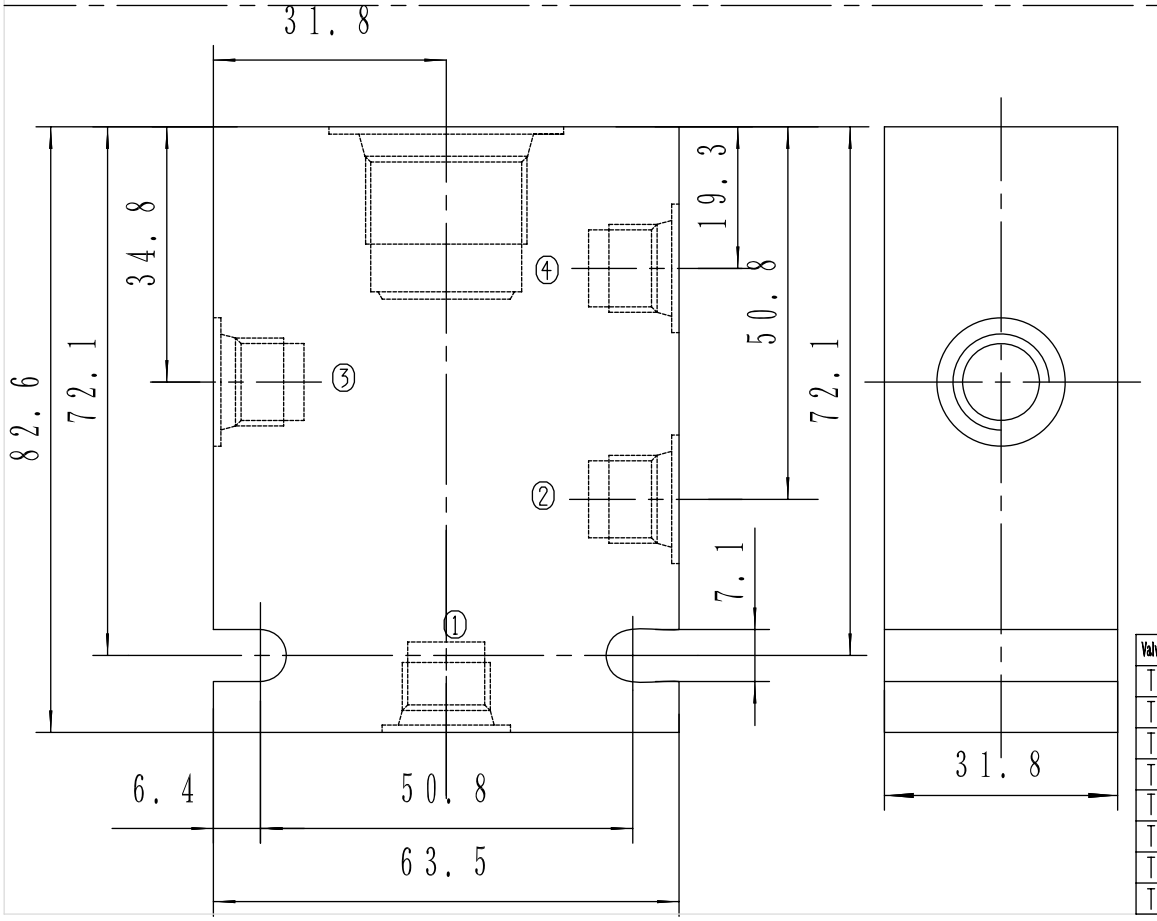

Valve block model	Oil mouth size	Valve material
T5-31A	G1/4	45
T5-31B	G1/4	Lc4
T5-33A	G3/8	45
T5-33B	G3/8	Lc4
T5-34A	SAE4	45
T5-34B	SAE4	Lc4
T5-36A	SAE6	45
T5-36B	SAE6	Lc4

Standard Ported Body

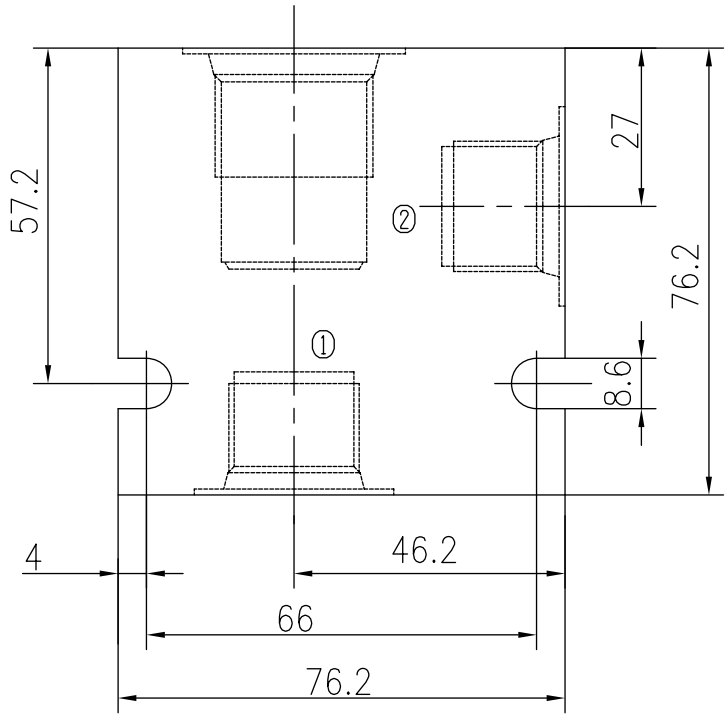

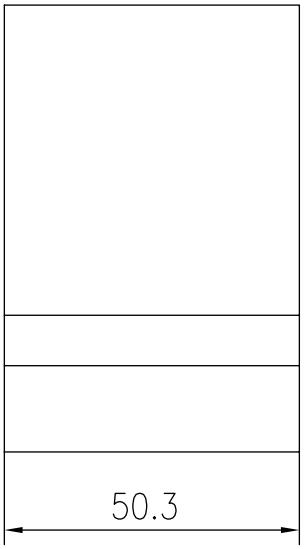

Valve block model	Oil mouth size	Valve piece of material
T6-11A	G1/4	45
T6-11B	G1/4	Lc4
T6-13A	G3/8	45
T6-13B	G3/8	Lc4
T6-14A	SAE4	45
T6-14B	SAE4	Lc4
T6-16A	SAE6	45
T6-16B	SAE6	Lc4

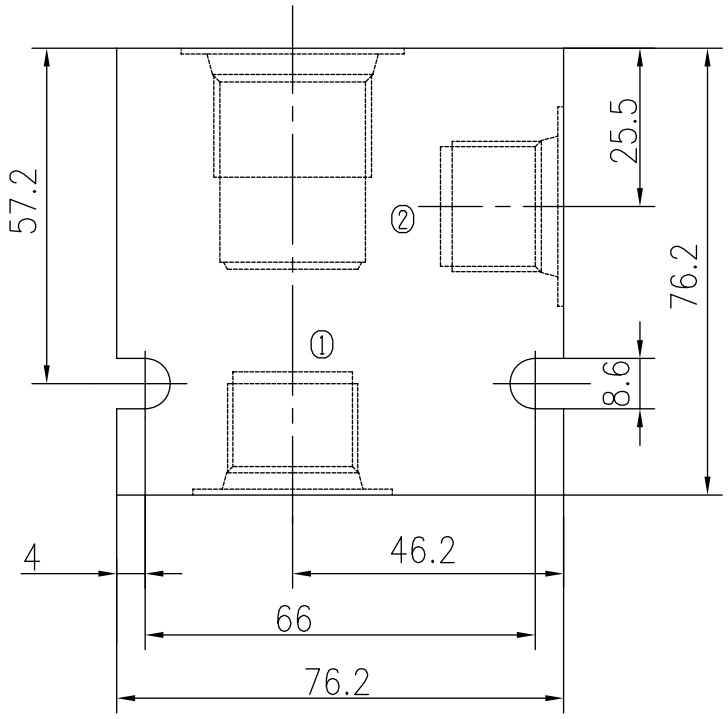

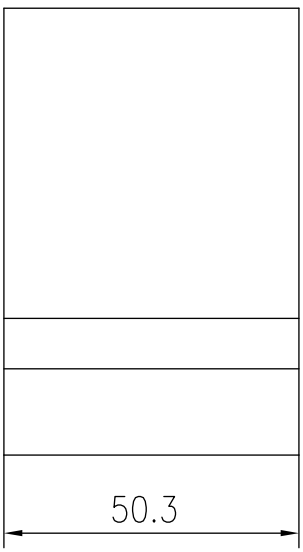

Valve block model	Oil mouth size	Valve piece of material
T7-11A	G1/4	45
T7-11B	G1/4	Lc4
T7-13A	G3/8	45
T7-13B	G3/8	Lc4
T7-14A	SAE4	45
T7-14B	SAE4	Lc4
T7-16A	SAE6	45
T7-16B	SAE6	Lc4

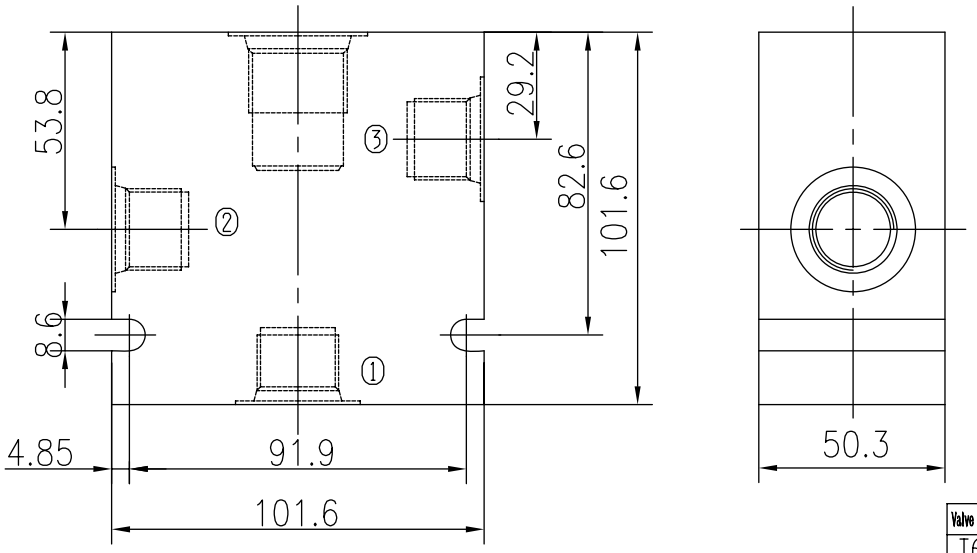

Valve block model	Oil mouth size	Valve material
T6-21A	G3/4	45
T6-21B	G3/4	Lc4
T6-23A	G1	45
T6-23B	G1	Lc4
T6-24A	SAE10	45
T6-24B	SAE10	Lc4
T6-26A	SAE12	45
T6-26B	SAE12	Lc4

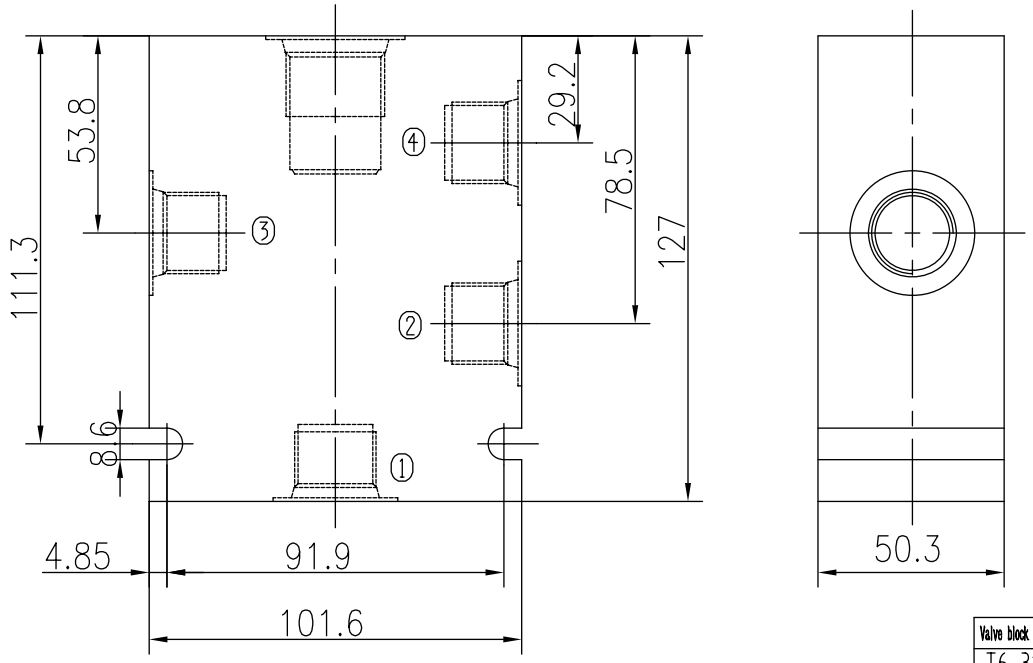

Valve block model	Oil mouth size	Valve material
T6-31A	G1/4	45
T6-31B	G1/4	Lc4
T6-33A	G3/8	45
T6-33B	G3/8	Lc4
T6-34A	SAE4	45
T6-34B	SAE4	Lc4
T6-36A	SAE6	45
T6-36B	SAE6	Lc4

E-Coil Shape Dim

E-Coil Performance and Model Define

Watts at 20℃		Duty Cycle	Operating TEMP Range	Insulation Class	Protection Class
ECLS ECHS	ECLB ECHB				
14W/22W	22W/26W	Continuous	-30℃~+50℃	H	IP65

Model Define

EC x x xxx x

- EC: Electro Coil
- x (Connection): L Double Leads; H Electrical Outlet
- x (EC Boring Dim): S Φ13(08 series); B Φ16(10 series); (12 series); (16 series)
- xxx (Voltage): 12=12VDC; 24=24VDC; 110=110VAC; 220=220VAC
- x (E-Coil Shape): A; B; C; D

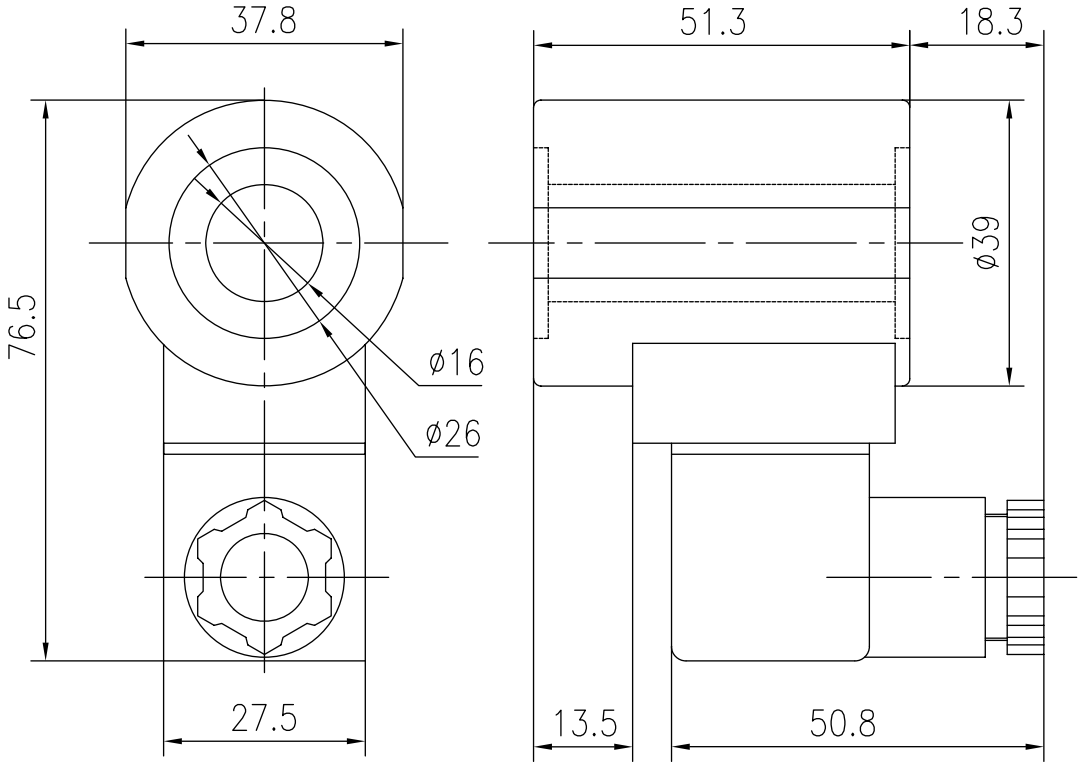

Optional Model

ECHB12
ECHB24
ECHB110
ECHB220

E-Coil Shape Dim

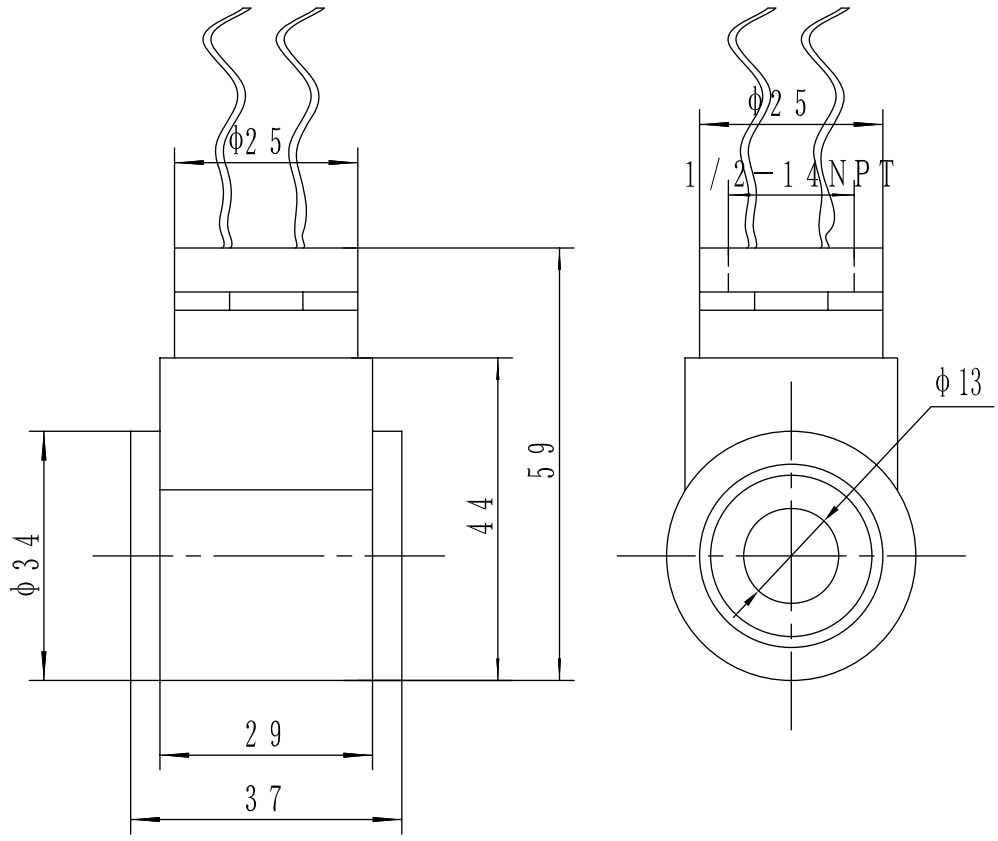

Optional Model
ECLS12A
ECLS24A
ECLS110A
ECLS220A

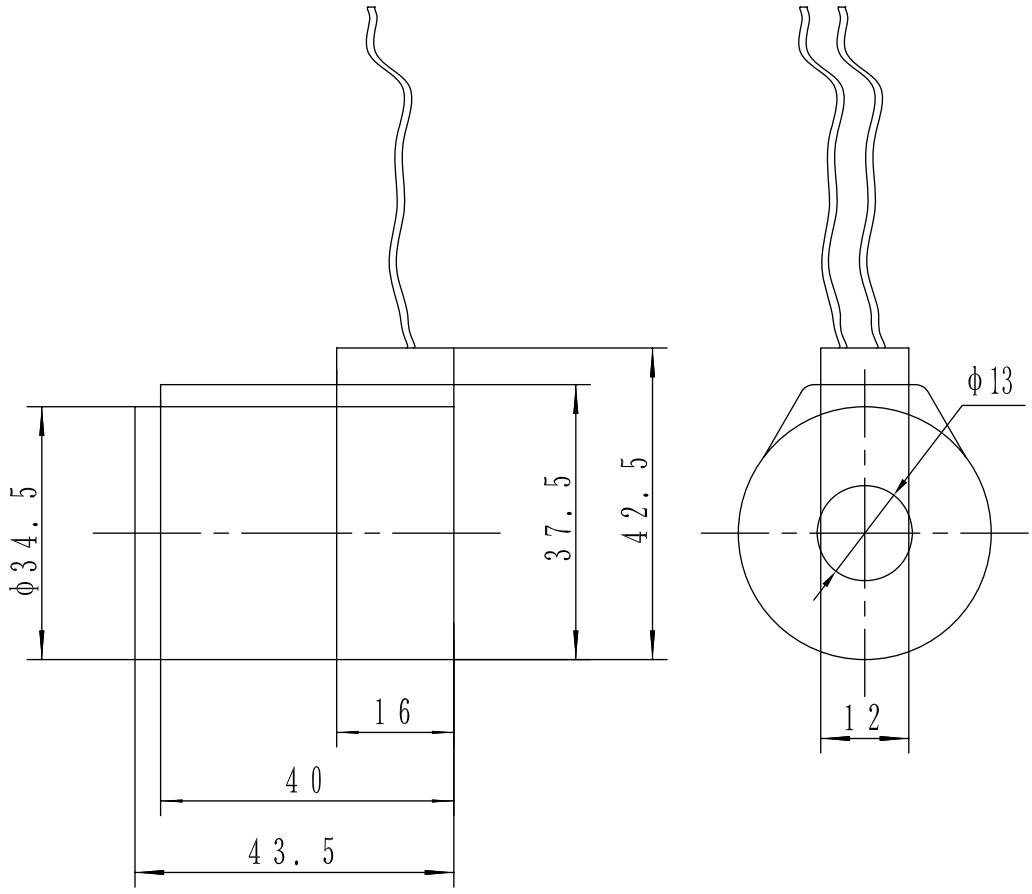

Optional Model
ECLS12B
ECLS24B
ECLS110B
ECLS220B

E-Coil Shape Dim

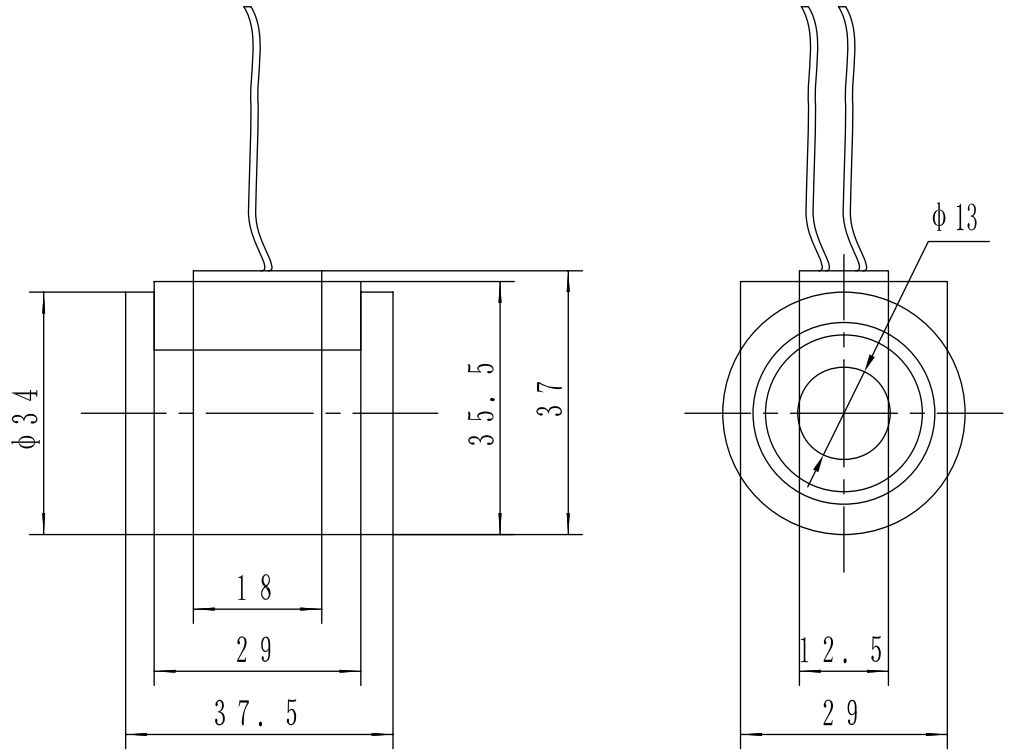

Optiona Model
ECLS12C
ECLS24C
ECLS110C
ECLS220C

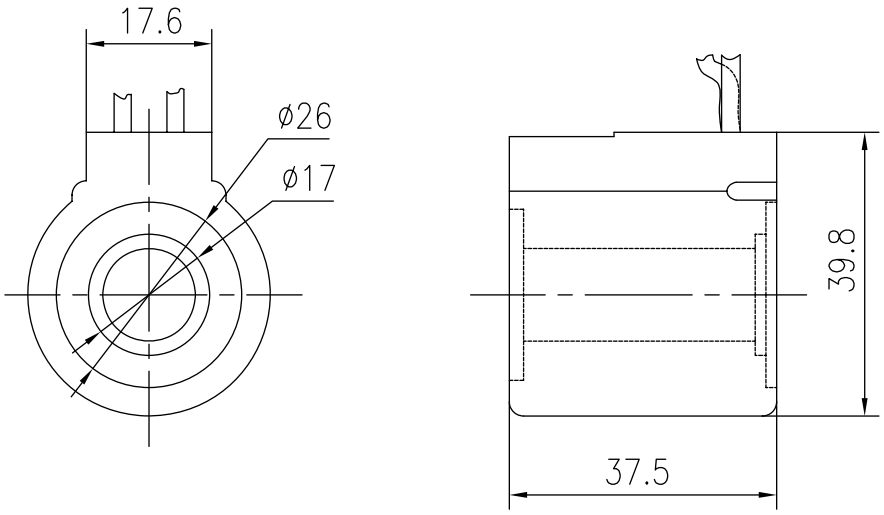

Optional Model
ECLS12D
ECLS24D
ECLS110D
ECLS220D

E-Coil Shape Dim

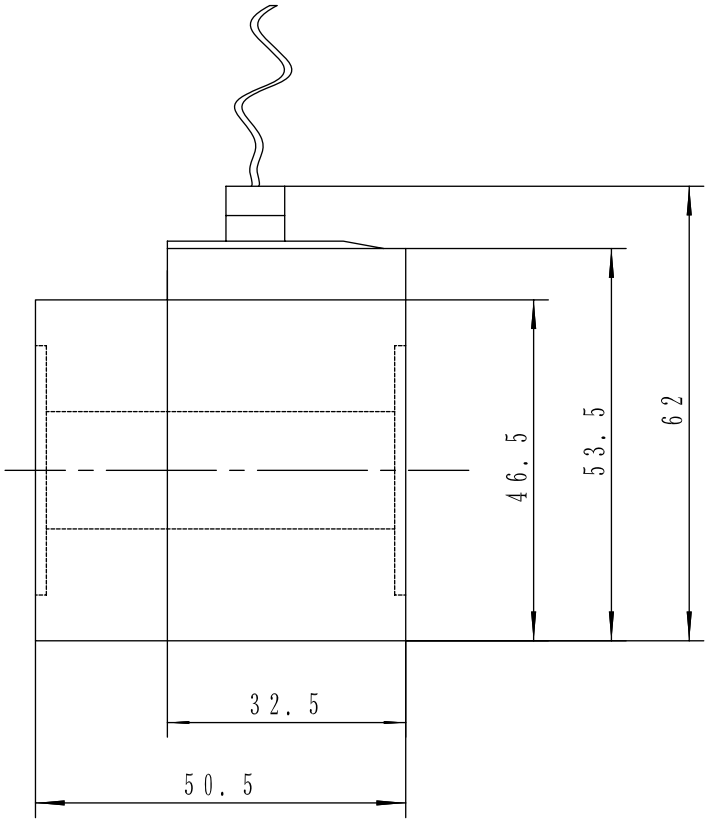

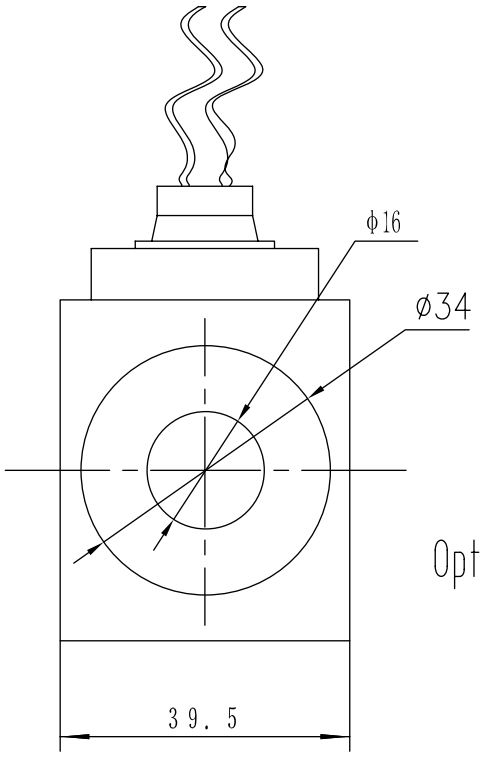

Optional Model
ECLB12
ECLB24
ECLB110
ECLB220

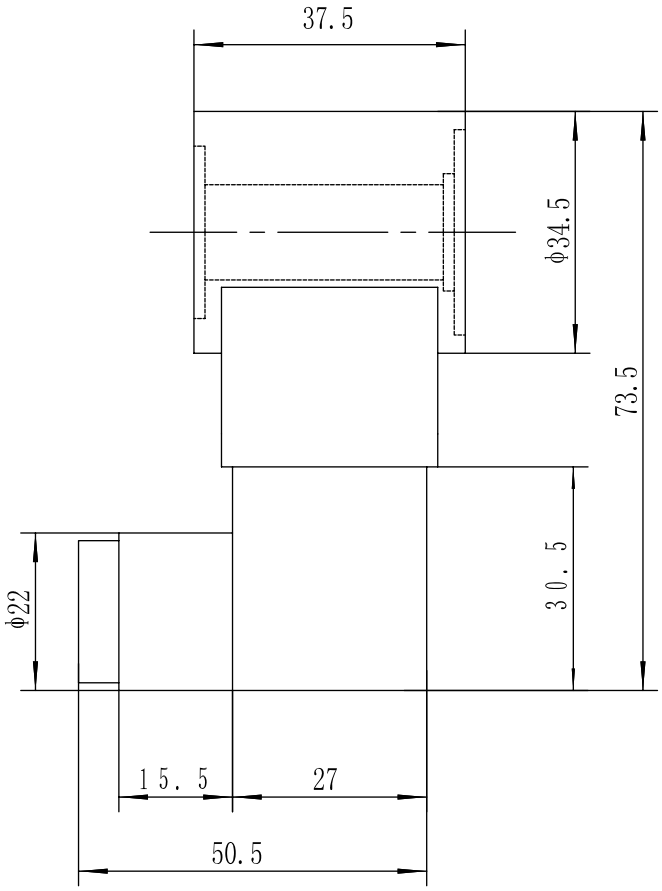

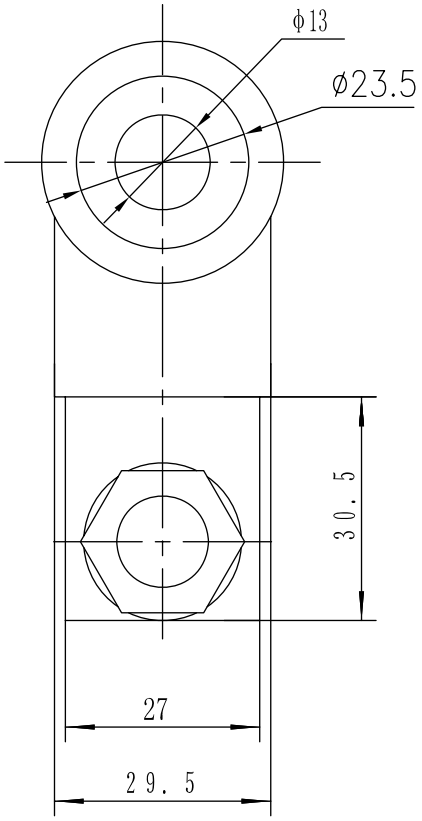

Optional Model
ECHS12
ECHS24
ECHS110
ECHS220